LAT-DS-00927-05	APPROVAL	DATE
CAL PROJECT MANAGER		7-11-03
CAL LEAD ENGINEER		7-10-03
CAL QA		7/10/03.

MASTER DRAWING

GLAST-CAL CM FILE COPY

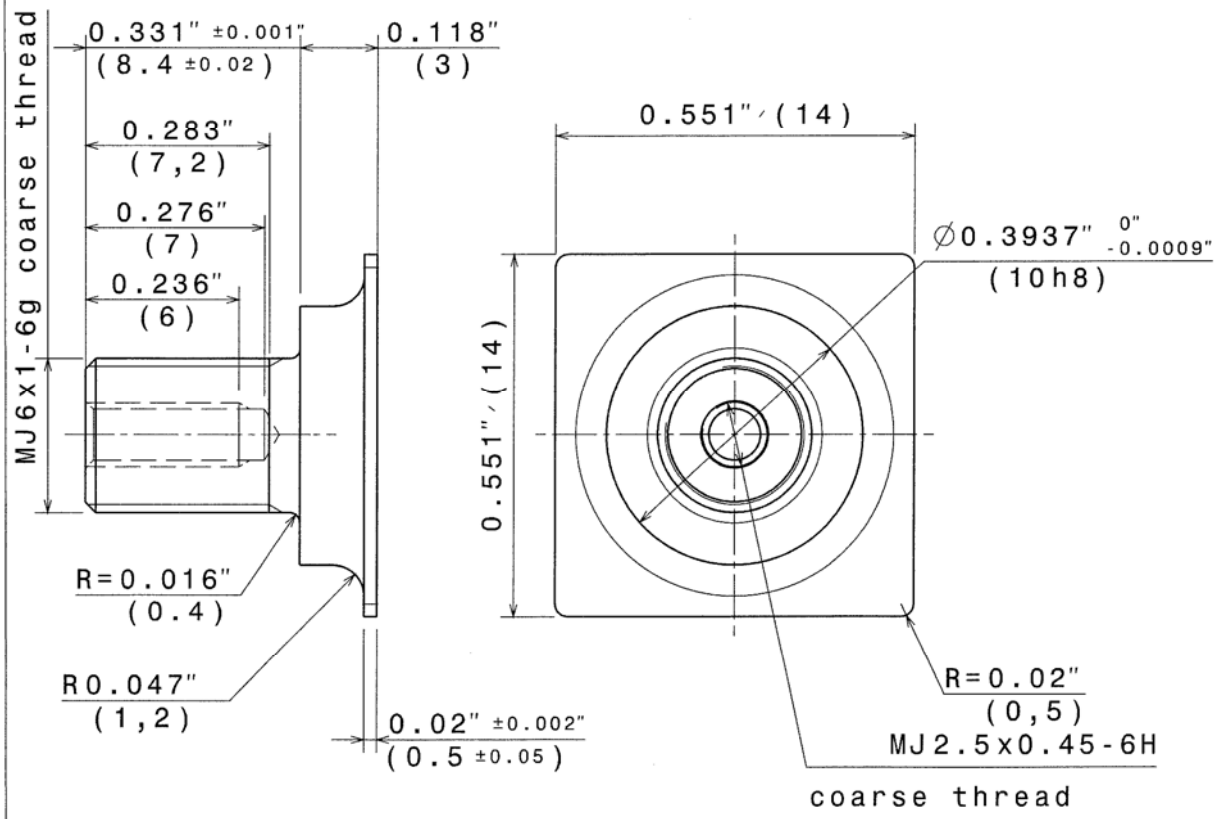

RELEASED FOR MANUFACTURE
11 Jul 2003

NOTA
Break all edges

Dimensions: inch (mm) Unless specified: Tolerances: ± 0.005 Surface finish: Ra 63 micro inch	A4 Scale: 4:1	Laboratoire Leprince-Ringuet ECOLE POLYTECHNIQUE 91128 PALAISEAU TEL: 01 69 33 31 87 FAX: 01 69 33 39 62 IN2P3
Material: Ti-6Al-4V Surface treatment: -	Quantity: 800	LATERAL INSERT
Drawing: Edy mai 2003 Checked: Ferreira Approuved: -		GLT-LLR-00-03

Fichier: