REV	DESCRIPTION	DWN	CHKR	APVD	DATE
7	SEE SHEET 3	WN	MN		12-09-03

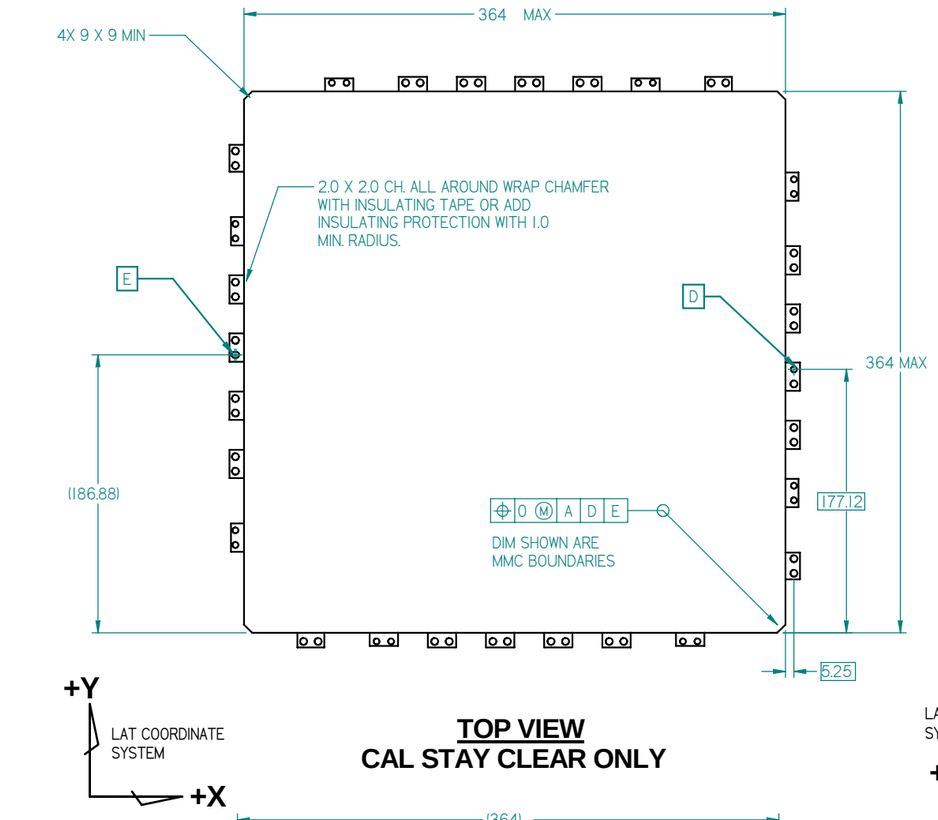

TOP VIEW
CAL STAY CLEAR ONLY

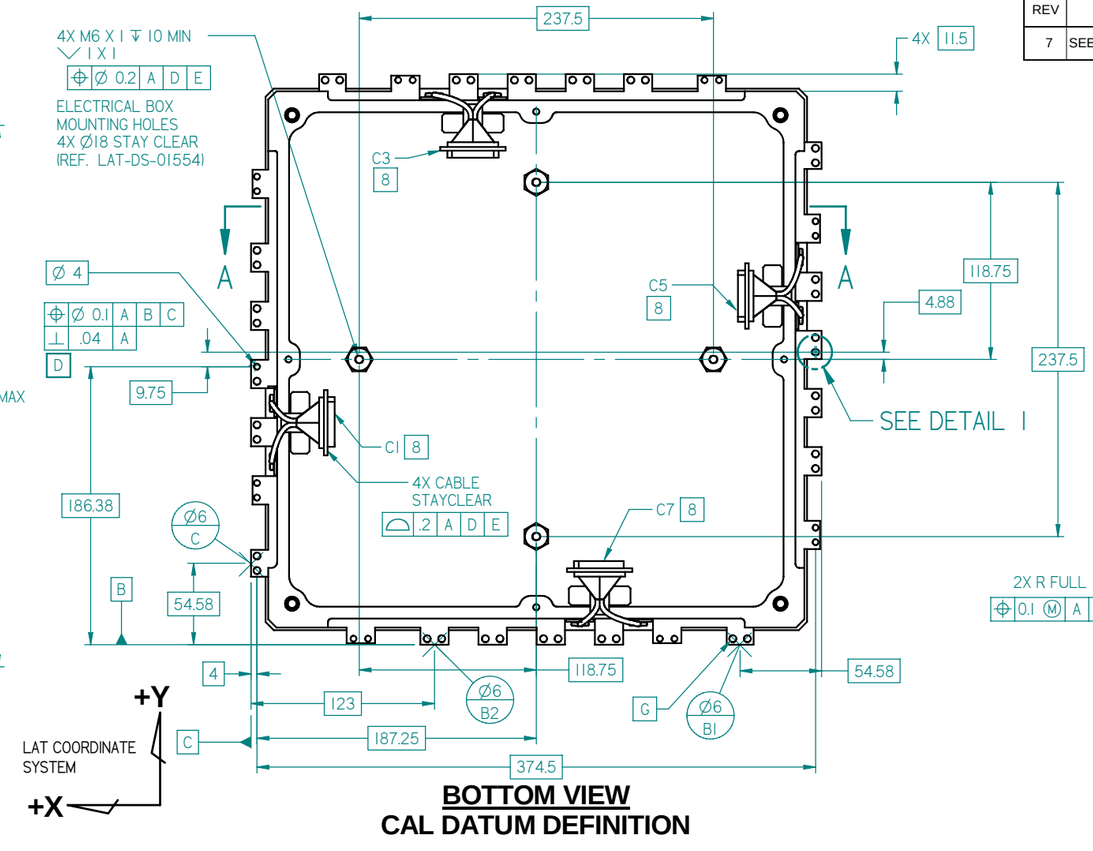

BOTTOM VIEW
CAL DATUM DEFINITION

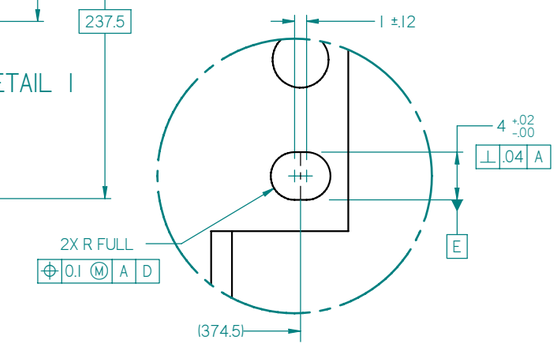

DETAIL 1
4:1

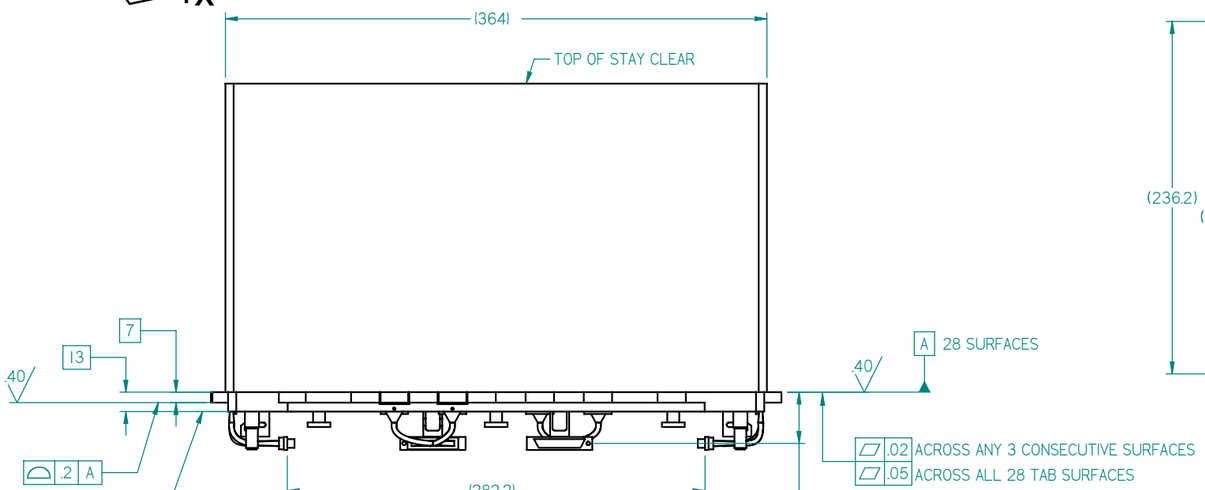

SIDE VIEW
CAL STAY CLEAR ONLY

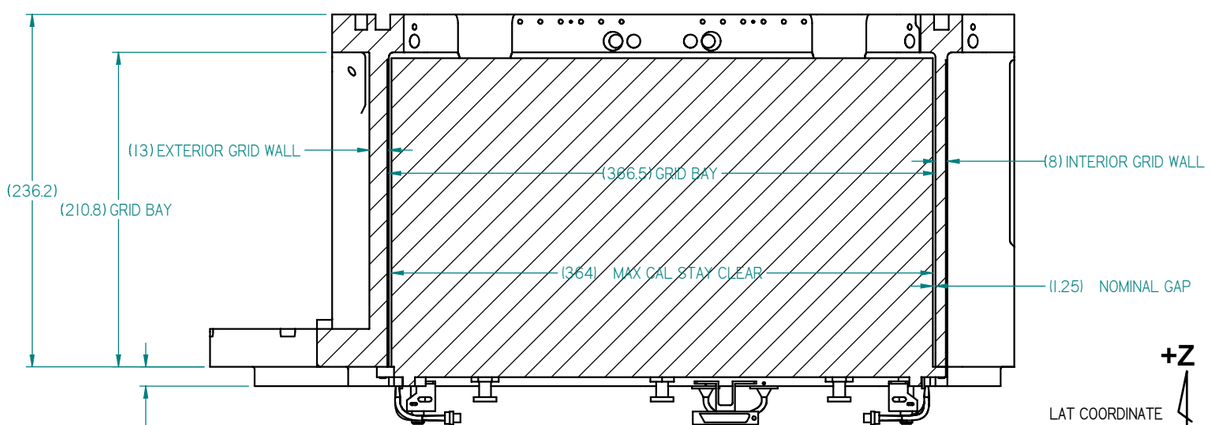

SECTION A-A SIDE VIEW
CAL STAY CLEAR / GRID

CHECK-PRINT
jfrank
08-19-2004 08:37:47 AM

NEXT ASSEMBLIES:

DIMENSIONING AND TOLERANCING IS IN ACCORDANCE WITH ASME Y14.5M-1994.

UNLESS OTHERWISE SPECIFIED
DIMENSIONS ARE IN MM.
TOLERANCES:
BREAK EDGES .2-.5
INTERNAL CORNERS R.4 MAX
FRACTIONS ± ---
DEC .XX ± .2
.XXX ± ---
.XXXX ± ---
ANGLE ± ---
ALL SURF ---

SCALE: 1:2 | DO NOT SCALE DRAWING | CAD FILE NAME: LAT-DS-00233-7.dft

STANFORD LINEAR ACCELERATOR CENTER
U.S. DEPARTMENT OF ENERGY
STANFORD UNIVERSITY STANFORD, CALIFORNIA

PROPRIETARY DATA OF STANFORD UNIVERSITY AND/OR U. S. DEPARTMENT OF ENERGY. RECIPIENT SHALL NOT PUBLISH THE INFORMATION WITHIN UNLESS GRANTED SPECIFIC PERMISSION OF STANFORD UNIVERSITY.

		DATE
ENGR	MARTIN NORDBY	
DWN	W.NG	12-11-2003
CHKR	MARTIN NORDBY	

APPROVALS
MARTIN NORDBY
NEIL JOHNSON
GUNTHER HALLER
MARC CAMPELL

LAT MECHANICAL SYSTEMS INTERFACE DEFINITION DWG CAL - LAT INTERFACE

DRAWING NUMBER: LAT-DS-00233
REVISION NUMBER: 7
D
SH 1 OF 4

LAT MECH SYS CAL LAT INTFC DEF

LAC FORMAT V2.0

REV	DESCRIPTION	DWN	CHKR	APVD	DATE
D	LAT-DS-00233 7				

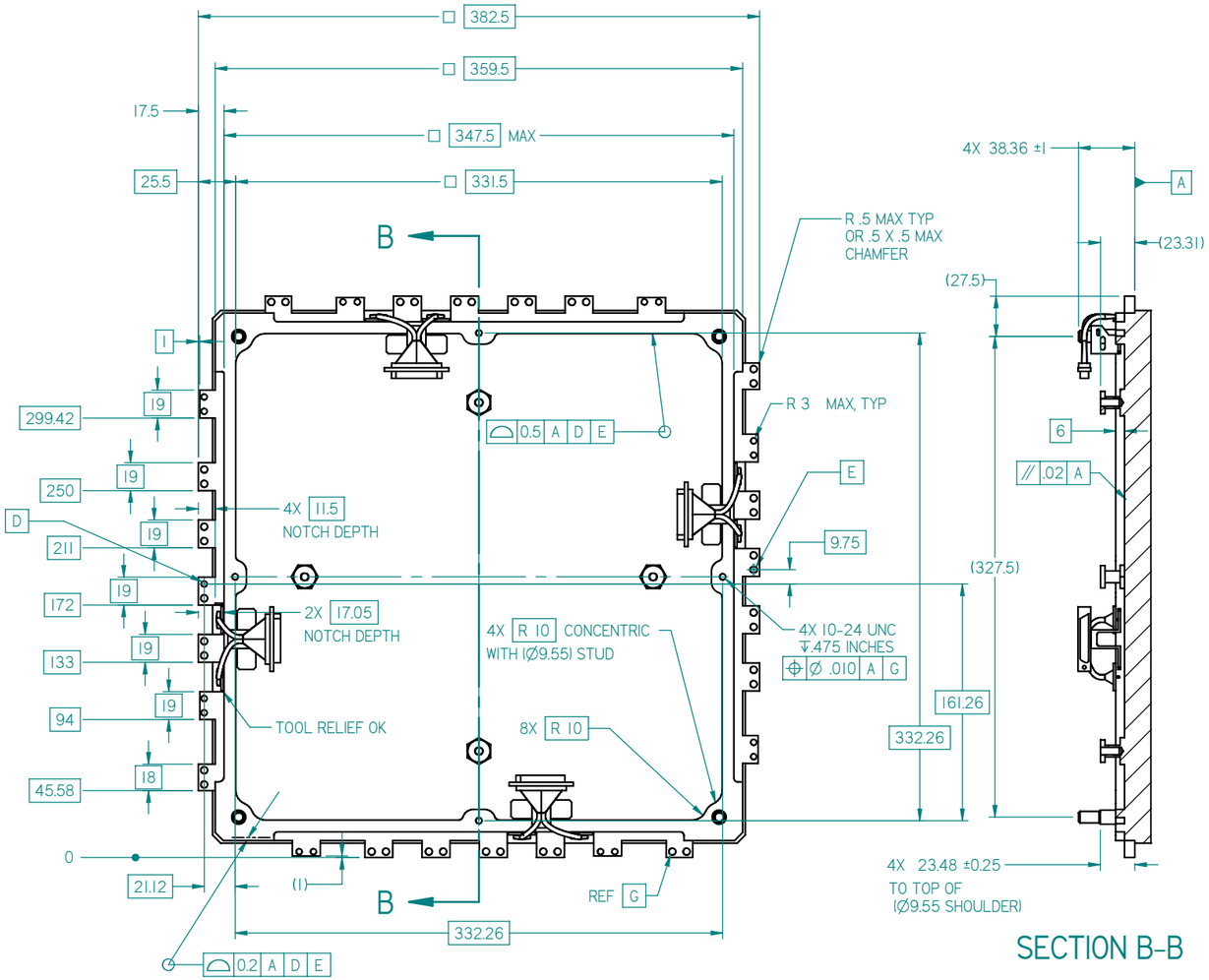

CAL BOTTOM VIEW
CAL BOTTOM PLATE TAB DEFINITION

NOTE: ROTATE PATTERN AT 90°. ROTATIONALLY SYMMETRIC ON ALL 4 SIDES

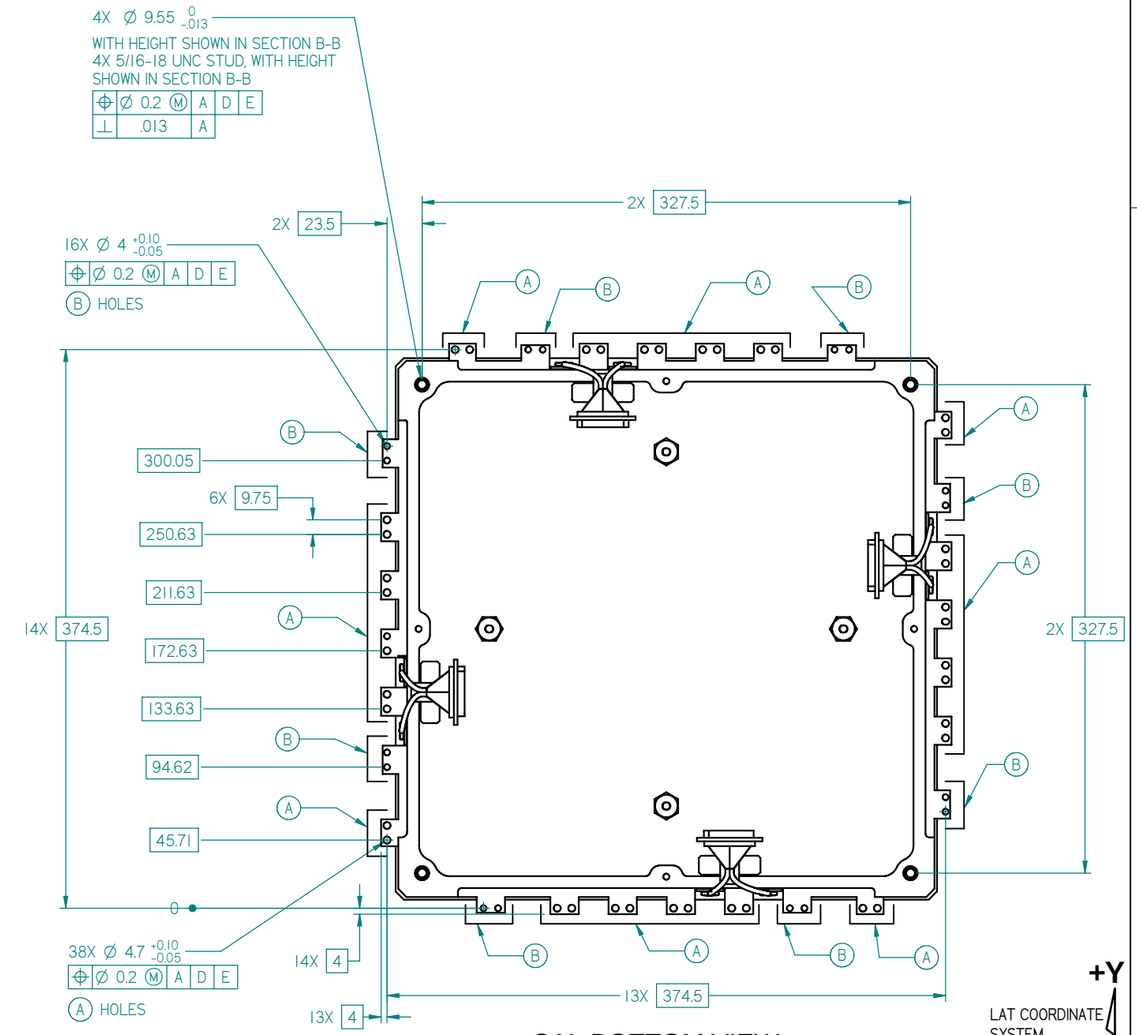

CAL BOTTOM VIEW
CAL MOUNTING HOLE definition

NOTE: ROTATE PATTERN AT 90°. ROTATIONALLY SYMMETRIC ON ALL 4 SIDES

CHECK-PRINT
jfrank
08-19-2004 08:37:47 AM

NEXT ASSEMBLIES:

DIMENSIONING AND TOLERANCING IS IN ACCORDANCE WITH ASME Y14.5M-1994.

UNLESS OTHERWISE SPECIFIED
DIMENSIONS ARE IN MM.
TOLERANCES:
BREAK EDGES .2-.5
INTERNAL CORNERS R.4 MAX
FRACTIONS ± ---
DEC .XX ± .2
.XXX ± ---
.XXXX ± ---
ANGLE ± ---
ALL SURF ---

SCALE: 1:2 | DO NOT SCALE DRAWING | CAD FILE NAME: LAT-DS-00233-7.dft

STANFORD LINEAR ACCELERATOR CENTER
U.S. DEPARTMENT OF ENERGY
STANFORD UNIVERSITY STANFORD, CALIFORNIA

PROPRIETARY DATA OF STANFORD UNIVERSITY AND/OR U. S. DEPARTMENT OF ENERGY. RECIPIENT SHALL NOT PUBLISH THE INFORMATION WITHIN UNLESS GRANTED SPECIFIC PERMISSION OF STANFORD UNIVERSITY.

		DATE	APPROVALS
ENGR	MARTIN NORDBY		M. NORDBY
DWN	W. NG	12-11-2003	NEIL JOHNSON
CHKR	M. NORDBY		GUNTHER HALLER
			MARC CAMPELL

LAT MECHANICAL SYSTEMS INTERFACE DEFINITION DWG CAL-LAT INTERFACE

DRAWING NUMBER: LAT-DS-00233
REVISION NUMBER: 7 D
SH 2 OF 4
LAT MECH SYS CAL LAT INTFC DEF

SLAC FORMAT V2.0

REV	DESCRIPTION	DWN	CHKR	APVD	DATE
7	UPDATE GRID; CHANGE CABLE STAY-CLEAR DIMS: 39.75 WAS 39.35, 59 WAS 58.9, 31.5 WAS 28.27, DELETE 45.84; CAL 9 X 9 CH. IS EXTENDED INTO CAL PLATE. VARIOUS PLAN VIEW DIMS. INCREASE DUE TO DATUMS U AND V MOVING OUTBOARD. REMOVED TABS AT CAL CORNERS, ADDED POSTS. REDRAWN AND REVISED CONNECTOR LOCATIONS. REF TABLE SHT 3 ZONE 2B.	WN	M.N.	M.N.	12/09/03

CHECK-PRINT
jfrank
08-19-2004 08:37:47 AM

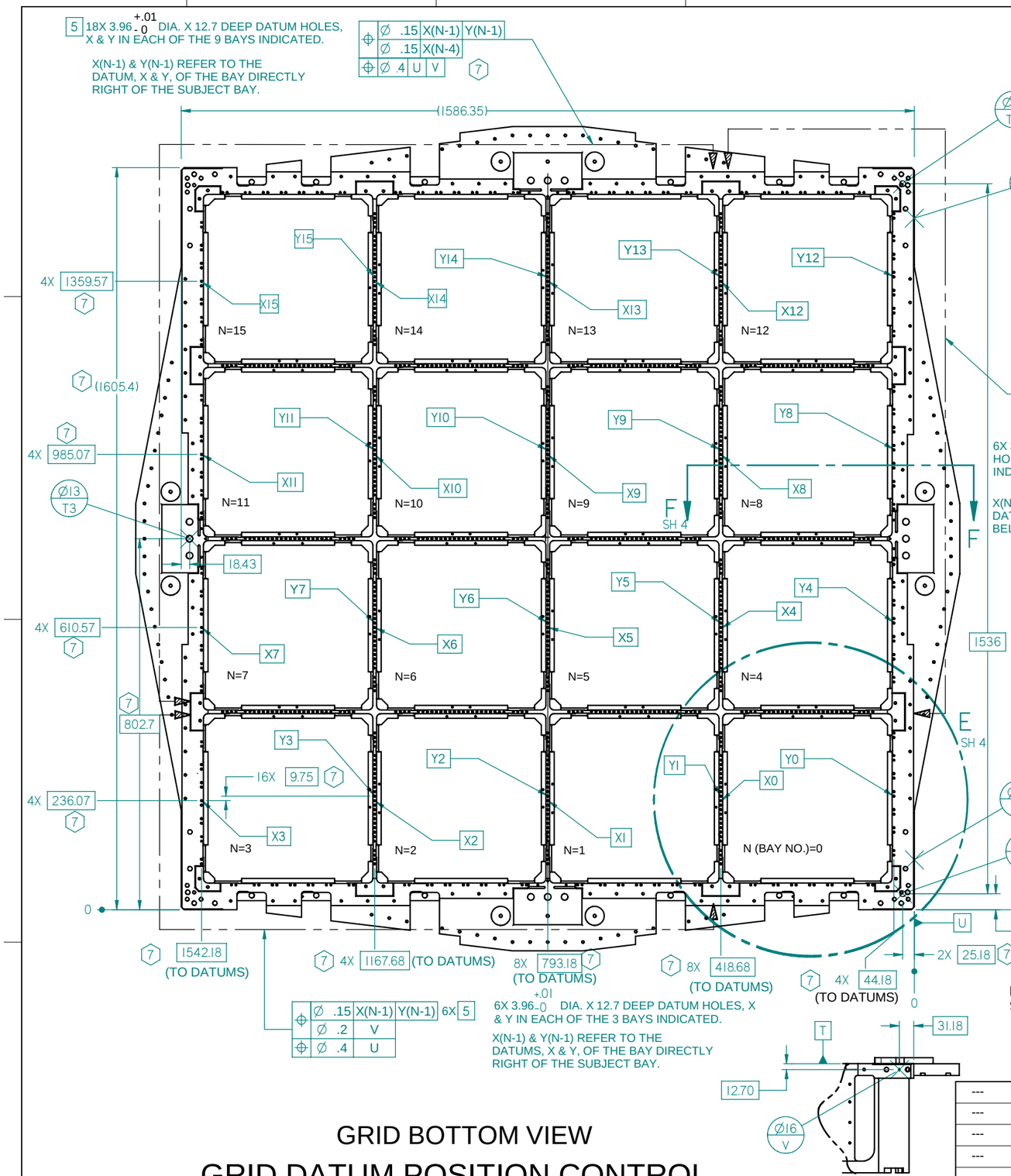

GRID BOTTOM VIEW

GRID DATUM POSITION CONTROL

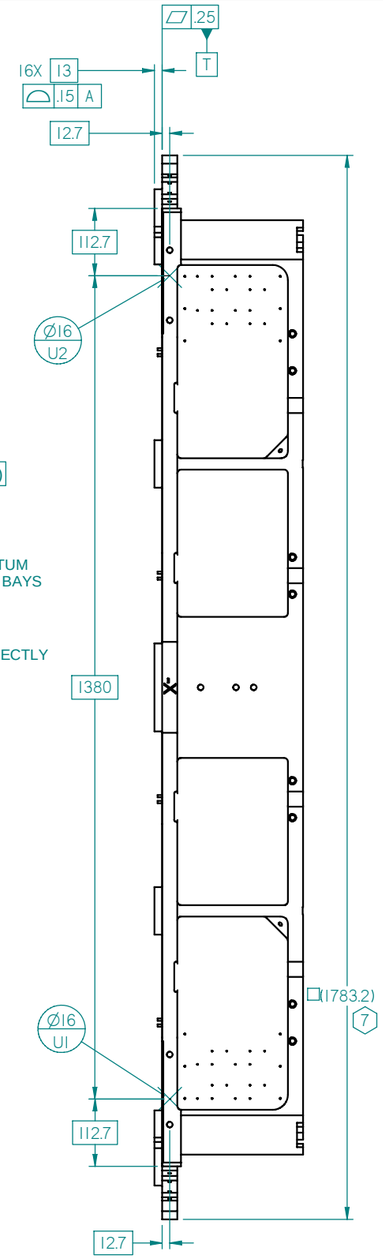

GRID SIDE VIEW 7

NOTES:

1. TO GENERATE COMPLETE CAL MOUNTING HOLE ARRAY, THE HOLE PATTERN SHOWN ON SHEET 4 FOR GRID BAY # 0 IS INDEXED IN THE +X & +Y DIRECTIONS FOR EACH SUCCESSIVE BAY.
2. HOLE PATTERN AND WALL DIMENSIONS ARE IDENTICAL FOR ALL 16 BAYS.
3. TO GENERATE ENTIRE PATTERN FOR THIS BAY ROTATE THE DIMENSIONED ARRAY OF HOLES 90 DEGREES ABOUT CENTER OF BAY FOR EACH OF THE REMAINING 3 SIDES.
4. HOLE DESCRIPTION:
   A. #8-32 UNC X 8.3 DP HELICOIL (MAX OD=5.59 MM)
   B. #6-32 UNC X 7 DP HELICOIL (MAX OD=4.90 MM)
5. PINS IN GRID: DATUMS X AND Y ARE REAMED FOR #24 DRILL ROD PIN. PRESS FIT Ø3.962 X 19.05 LG ST STEEL BULLET-NOSE PIN INTO GRID. HEIGHT OF EXPOSED PIN IS 7.62±.13.
6. ALL EXTERNAL AND CONTACTING SURFACES TO BE ELECTROLESS NICKEL PLATED, PER AMS-2451/1.
7. 6X (9.75 DIA.) CLEARANCE HOLES APPLY ON SIDES WITH (4 DIA.) REAMED HOLES FOR D AND E. 7X APPLIES ON ORTHOGONAL SIDES.
8. CENTER OF CONNECTOR MATING SURFACES AT TEM BOX CONNECTION IS SHOWN. TEM CONNECTOR LOCATIONS WILL BE AS FOLLOWS. TOLERANCE ON LOCATION IS ± 0.5 MM

CAL FLEX CABLE TEM CONNECTOR LOCATIONS

CAL CABLE #	LOCATION OF CABLE FROM BAY CENTER	X (mm)	Y (mm)	Z (mm)
C1	+X SIDE, -Y LOCATION	141.097	-42.037	-34.366
C3	+Y SIDE, +X LOCATION	+42.469	141.097	-34.366
C5	-X SIDE, +Y LOCATION	-141.097	+42.469	-34.366
C7	-Y SIDE, -X LOCATION	-42.469	-141.097	-34.366

X, Y = 0, 0 CENTER OF BAY
Z=0 BOTTOM OF GRID 1236.2mm BELOW LAT COORD SYSTEM Z=0 PLANE, DATUM A ON CAL

NEXT ASSEMBLIES:

DIMENSIONING AND TOLERANCING IS IN ACCORDANCE WITH ASME Y14.5M-1994.

UNLESS OTHERWISE SPECIFIED
DIMENSIONS ARE IN MM.
TOLERANCES:
BREAK EDGES .2-.5
INTERNAL CORNERS R.4 MAX
FRACTIONS ± ---
DEC .XX ± .2
.XXX ± ---
.XXXX ± ---
ANGLE ± ---
ALL SURF ---

SCALE: 1:4 | DO NOT SCALE DRAWING | CAD FILE NAME: LAT-DS-00233-7.dft

STANFORD LINEAR ACCELERATOR CENTER
U.S. DEPARTMENT OF ENERGY
STANFORD UNIVERSITY STANFORD, CALIFORNIA

PROPRIETARY DATA OF STANFORD UNIVERSITY AND/OR U. S. DEPARTMENT OF ENERGY. RECIPIENT SHALL NOT PUBLISH THE INFORMATION WITHIN UNLESS GRANTED SPECIFIC PERMISSION OF STANFORD UNIVERSITY.

		DATE
ENGR	MARTIN NORDBY	
DWN	W.NG	12-11-2003
CHKR	MARTIN NORDBY	

APPROVALS:
MARTIN NORDBY
NEIL JOHNSON
GUNTHER HALLER
MARC CAMPELL

LAT MECHANICAL SYSTEMS INTERFACE DEFINITION DWG CAL - LAT INTERFACE

DRAWING NUMBER: LAT-DS-00233 | REVISION NUMBER: 7 | D

SH 3 OF 4

LAT MECH SYS CAL LAT INTFC DEF

REV	DESCRIPTION	DWN	CHKR	APVD	DATE
7	SEE SHEET 3				

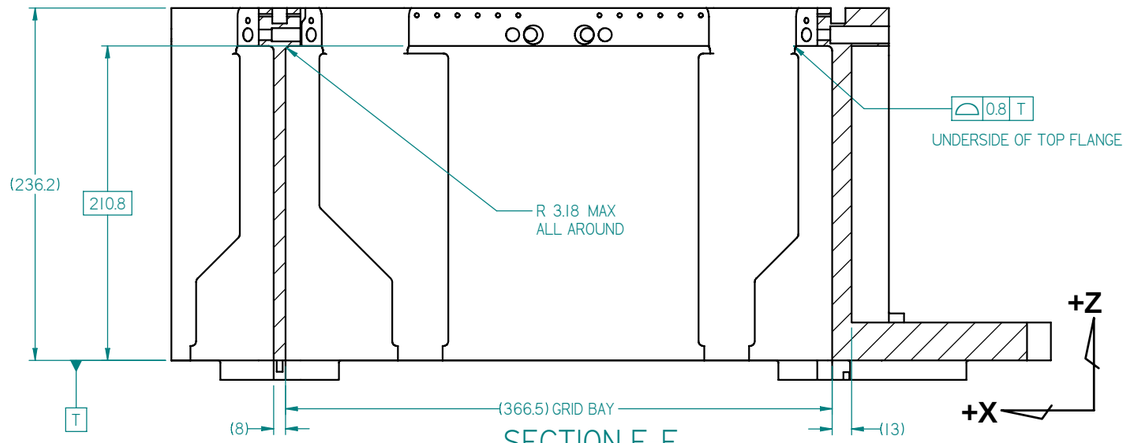

SECTION F-F
1:2

GRID BAY
FROM SH 3

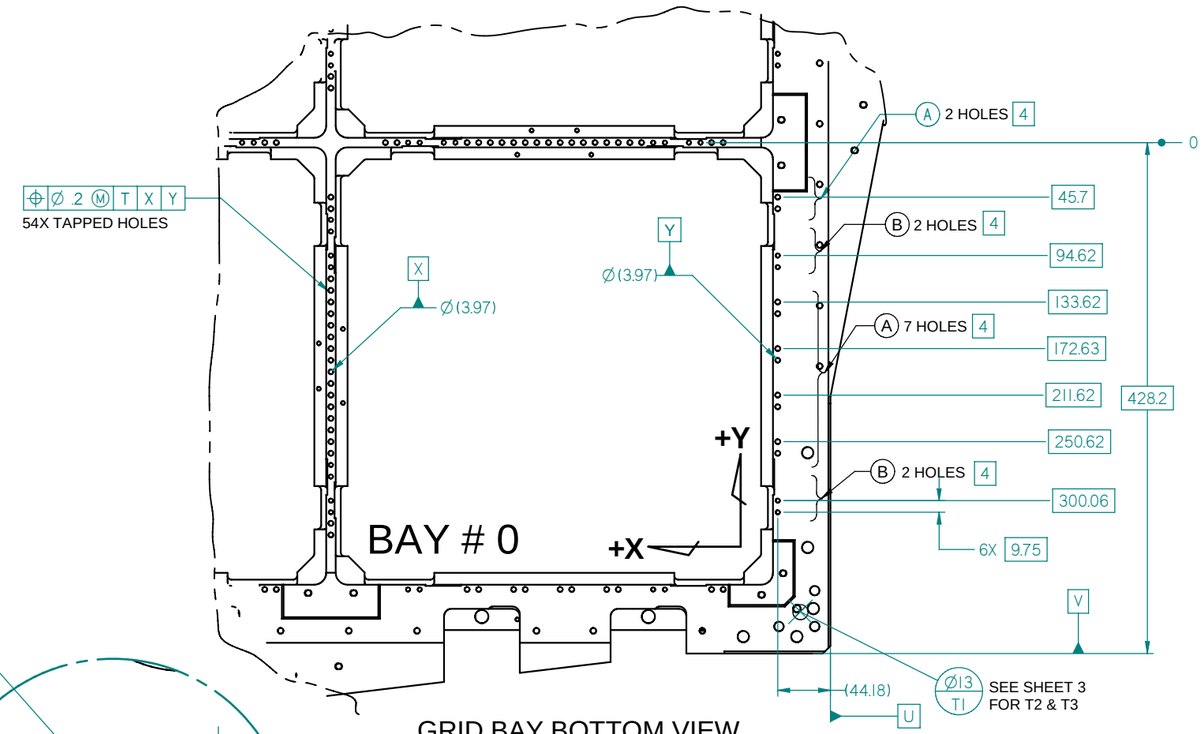

GRID BAY BOTTOM VIEW
CAL MOUNTING HOLE POSITION 1 2 3

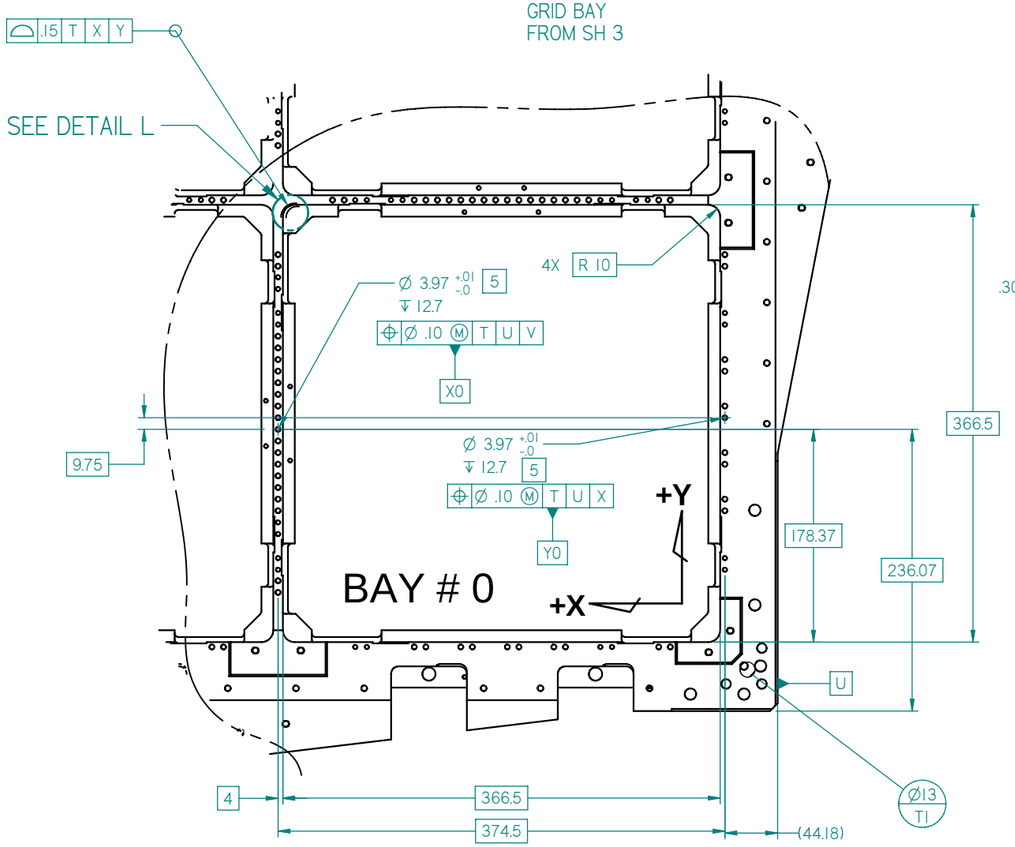

VIEW E
GRID BAY BOTTOM

GRID DATUM AND BAY PROFILE DEFINITION
SEE ALSO SHEET 3

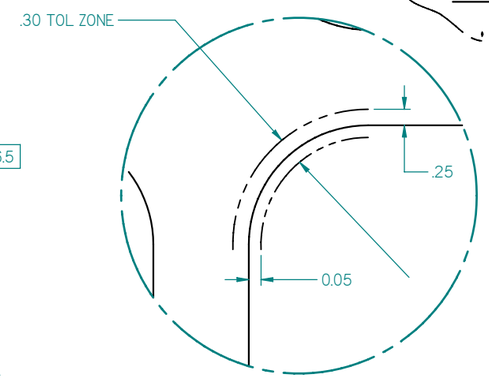

DETAIL L
4:1

CHECK-PRINT
jfrank
08-19-2004 08:37:47 AM

NEXT ASSEMBLIES:

DIMENSIONING AND TOLERANCING IS IN ACCORDANCE WITH ASME Y14.5M-1994.

UNLESS OTHERWISE SPECIFIED
DIMENSIONS ARE IN MM.
TOLERANCES:
BREAK EDGES .2-.5
INTERNAL CORNERS R.4 MAX
FRACTIONS ± ---
DEC .XX ± .2
.XXX ± ---
.XXXX ± ---
ANGLE ± ---
ALL SURF √ ---

SCALE: 1:4

DO NOT SCALE DRAWING

CAD FILE NAME: LAT-DS-00233-7.dft

STANFORD LINEAR ACCELERATOR CENTER
U.S. DEPARTMENT OF ENERGY
STANFORD UNIVERSITY STANFORD, CALIFORNIA

PROPRIETARY DATA OF STANFORD UNIVERSITY AND/OR U. S. DEPARTMENT OF ENERGY. RECIPIENT SHALL NOT PUBLISH THE INFORMATION WITHIN UNLESS GRANTED SPECIFIC PERMISSION OF STANFORD UNIVERSITY.

		DATE
ENGR	MARTIN NORDBY	
DWN	W.NG	12-11-2003
CHKR	MARTIN NORDBY	

APPROVALS
MARTIN NORDBY
NEIL JOHNSON
GUNTHER HALLER
MARC CAMPELL

LAT MECHANICAL SYSTEMS INTERFACE DEFINITION DWG CAL - LAT INTERFACE

DRAWING NUMBER: LAT-DS-00233
REVISION NUMBER: 7
D
SH 4 OF 4

LAT MECH SYS CAL LAT INTFC DEF

SLAC FORMAT V2.0