GLAST LAT SPECIFICATION	Document # LAT-PS-03933-01	Date Effective 8 June 2004
	Prepared by(s) James Ampe	Supersedes None
	Subsystem/Office Calorimeter Subsystem	
Document Title LAT Calorimeter TEM Mating and Verification Procedure		

Gamma-ray Large Area Space Telescope (GLAST)

Large Area Telescope (LAT) Calorimeter

TEM Mating and Verification Procedure

MASTER DOCUMENT
10 June 2004
GLAST-CAL CM FILE COPY

DOCUMENT APPROVAL

Prepared by:

James Ampe	10 June 2004
James Ampe CAL Electrical Subsystem Lead	Date

Approved by:

Nick Virmani	10 June 2004
Nick Virmani Quality Assurance Manager	Date
W. Neil Johnson	10 June 2004
W. Neil Johnson CAL Subsystem Manager	Date

CHANGE HISTORY LOG

Revision	Effective Date	Description of Changes
	1/13/03	Initial Release of LAT-PS-01335, Engineering Model AFEE Board Test Procedure
01	5/27/04	Document revised for TEM checkout prior to connecting flight AFEE Boards. Revised to utilize AFEE Monitor and Breakout Box.
01	6/8/04	Added expected values to tables

Table of Contents

1 INTRODUCTION 7
1.1 PURPOSE 7
1.2 APPLICABLE DOCUMENTS 7
1.3 DEFINITIONS AND ACRONYMS 7
1.3.1 Acronyms 7
2 ANALOG FRONT END ELECTRONICS CONNECTIONS DESCRIPTION 8
3 AFEE MONITOR AND BREAKOUT BOX CONNECTION CONFIGURATION 9
4 TEM CONNECTION TEST DESCRIPTION 11
4.1 Unpowered TEM Connections Checkout 11
4.2 Powered TEM Connections Checkout 24
4.3 Powered TEM Connections With Resistive Load Checkout 37
4.4 Powered TEM with Known Good AFEE board Checkout 42

List of Figures

Figure 1 – AFEE to TEM Flight Configuration and Connections. 8
Figure 2 – AFEE Monitor Board Connection Diagram 9
Figure 3. AFEE Monitor Board Jumpers and Test Points for one AFEE-TEM Connector. 10

List of Tables

Table 1. TEM Unpowered Measurements, Low Impedance-to-Ground Pins. AFEE Monitor box jumpers removed for thse signals, probe corresponding jumper pin away from testpoint. ...12
Table 2. TEM Unpowered Measurements, High Impedance-to-Ground Pins. Supply pins measured at jumper pin away from test point. 13
Table 3. TEM Unpowered Measurements, Low Impedance-to-Ground Pins. AFEE Monitor box jumpers removed for thse signals, probe corresponding jumper pin away from testpoint. ...15
Table 4. TEM Unpowered Measurements, High Impedance-to-Ground Pins. Supply pins measured at jumper pin away from test point. 16
Table 5. TEM Unpowered Measurements, Low Impedance-to-Ground Pins. AFEE Monitor box jumpers removed for thse signals, probe corresponding jumper pin away from testpoint. ...18
Table 6. TEM Unpowered Measurements, High Impedance-to-Ground Pins. Supply pins measured at jumper pin away from test point. 19
Table 7. TEM Unpowered Measurements, Low Impedance-to-Ground Pins. AFEE Monitor box jumpers removed for thse signals, probe corresponding jumper pin away from testpoint. ...21
Table 8. TEM Unpowered Measurements, High Impedance-to-Ground Pins. Supply pins measured at jumper pin away from test point. 22
Table 9. TEM Powered Measurements, No Load. Measure supply and retun lines at jumper pin away from testpoint. 25
Table 10. TEM Powered Measurements, Signal Testpoints, no load. Voltages expected between zero and 3.3 volts. 26
Table 11. TEM Powered Measurements, No Load. Measure supply and retun lines at jumper pin away from testpoint. 28
Table 12. TEM Powered Measurements, Signal Testpoints, no load. Voltages expected between zero and 3.3 volts. 29
Table 13. TEM Powered Measurements, No Load. Measure supply and retun lines at jumper pin away from testpoint. 31
Table 14. TEM Powered Measurements, Signal Testpoints, no load. Voltages expected between zero and 3.3 volts. 32
Table 15. TEM Powered Measurements, No Load. Measure supply and retun lines at jumper pin away from testpoint. 34
Table 16. TEM Powered Measurements, Signal Testpoints, no load. Voltages expected between zero and 3.3 volts. 35
Table 17. TEM Powered Measurements, Supply Voltages, Resistive Load on TEM. 38
Table 18. TEM Powered Measurements, Output Signal Voltages, Resistive Load on TEM. 38
Table 19. TEM Powered Measurements, TEM Polyswitch test. 38

Table 20. TEM Powered Measurements, Supply Voltages, Resistive Load on TEM.....39
Table 21. TEM Powered Measurements, Output Signal Voltages, Resistive Load on TEM.....39
Table 22. TEM Powered Measurements, TEM Polyswitch test.....39
Table 23. TEM Powered Measurements, Supply Voltages, Resistive Load on TEM.....40
Table 24. TEM Powered Measurements, Output Signal Voltages, Resistive Load on TEM.....40
Table 25. TEM Powered Measurements, TEM Polyswitch test.....40
Table 26. TEM Powered Measurements, Supply Voltages, Resistive Load on TEM.....41
Table 27. TEM Powered Measurements, Output Signal Voltages, Resistive Load on TEM.....41
Table 28. TEM Powered Measurements, TEM Polyswitch test.....41
Table 29. TEM Powered Measurements, Known-Good AFEE Board on TEM. 43
Table 30. TEM Powered Measurements, Known Good AFEE Board Attached.....43
Table 31. TEM Powered Measurements, Known-Good AFEE Board on TEM. 45
Table 32. TEM Powered Measurements, Known Good AFEE Board Attached.....45
Table 33. TEM Powered Measurements, Known-Good AFEE Board on TEM. 47
Table 34. TEM Powered Measurements, Known Good AFEE Board Attached.....47
Table 35. TEM Powered Measurements, Known-Good AFEE Board on TEM. 49
Table 36. TEM Powered Measurements, Known Good AFEE Board Attached.....49

1 INTRODUCTION

1.1 PURPOSE

This document details the procedures for performing testing of Tower Electronics Modules (TEMs) to be used for flight AFEE board testing. The completion of this procedure enables use of the particular TEM for flight AFEE circuit board testing.

1.2 APPLICABLE DOCUMENTS

The following documents are applicable to the extent specified within. Unless otherwise indicated, the latest issue in effect shall apply. In the event of a conflict between these documents and the contents of LAT-SS-01335, those contained herein shall be considered the superseding requirement.

NASA-STD-8739.7	Electrostatic Discharge Control
LAT-MD-00408	LAT Program Instrument Performance Verification Plan
LAT-SS-00210	LAT-CAL Subsystem Level IV Specification
LAT-SS-00222	Calorimeter Module Assembly, Test, and Calibration Requirements
LAT-SS-00262	Calorimeter Module Assembly and Test Plan
LAT-SS-01345	Calorimeter Module Verification & Environmental Test Plan
LAT-SS-01371	Calorimeter Module Functional Test Procedure
LAT-DS-03761	Cal AFEE Monitor and Breakout Board Layout
LAT-DS-03760	Cal AFEE Monitor and Breakout Board Schematic
LAT-SS-03601	Cal AFEE Board Verification Plan

1.3 DEFINITIONS AND ACRONYMS

1.3.1 Acronyms

AFEE	Analog Front End Electronics of the Calorimeter
CAL	Calorimeter Subsystem of the LAT
DAS	Data Acquisition System
ESD	Electrostatic Discharge
GLAST	Gamma-Ray Large Area Space Telescope
LAT	Large Area Telescope
TEM	Tower Electronics Module

2 ANALOG FRONT END ELECTRONICS CONNECTIONS DESCRIPTION

The Calorimeter Analog Front End Electroincs (AFEE) boards are the flight electronics which convert the CDE PIN diode electrical signals to digital bits, which are then sent to the Tower Electronics Module (TEM). There is one AFEE board per side of the cubic shaped Calorimeter. Each Calorimeter module consists of two AFEE-X boards and two AFEE-Y boards. A "Y" shaped cable from two 37 contact Nano connectors joined to one 69 contact micro connector is part of the assembly. The electrical interface between the TEM and the Calorimeter is at the 69 contact micro connector.

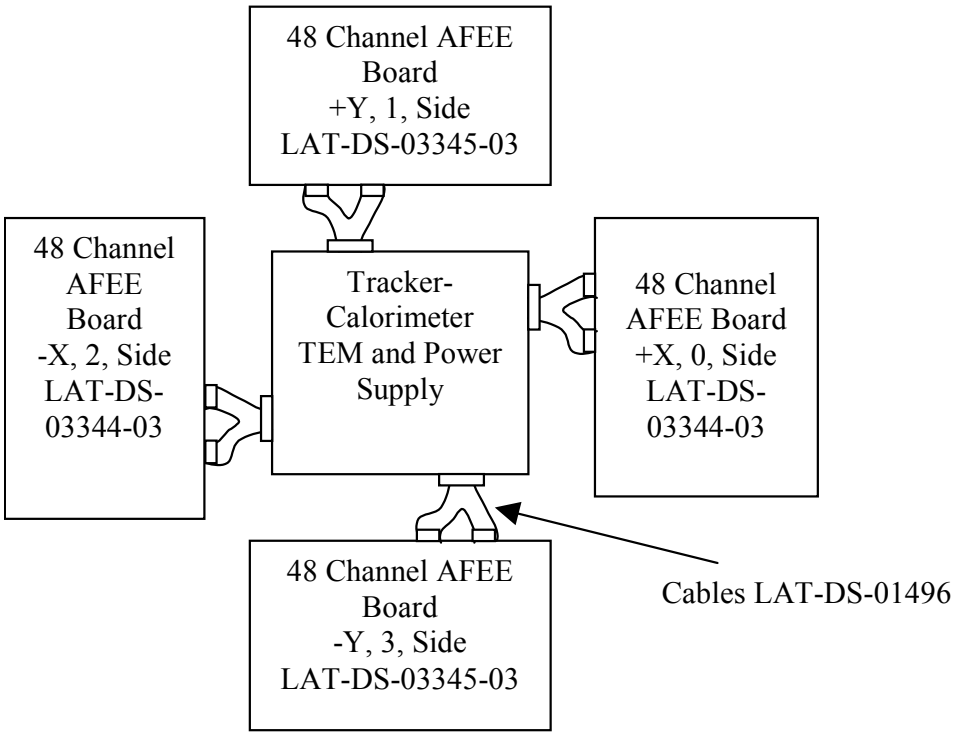

Figure 1 – AFEE to TEM Flight Configuration and Connections.

3 AFEE MONITOR AND BREAKOUT BOX CONNECTION CONFIGURATION

The AFEE Montior and Breakout Box, referred to as simply the AFEE Monitor board, is used as an interface between a TEM and four AFEE boards in test configuration of the AFEE boards. The AFEE Monitor board will not be used as an interface once the AFEE boards are mounted on the flight calorimeter structure.

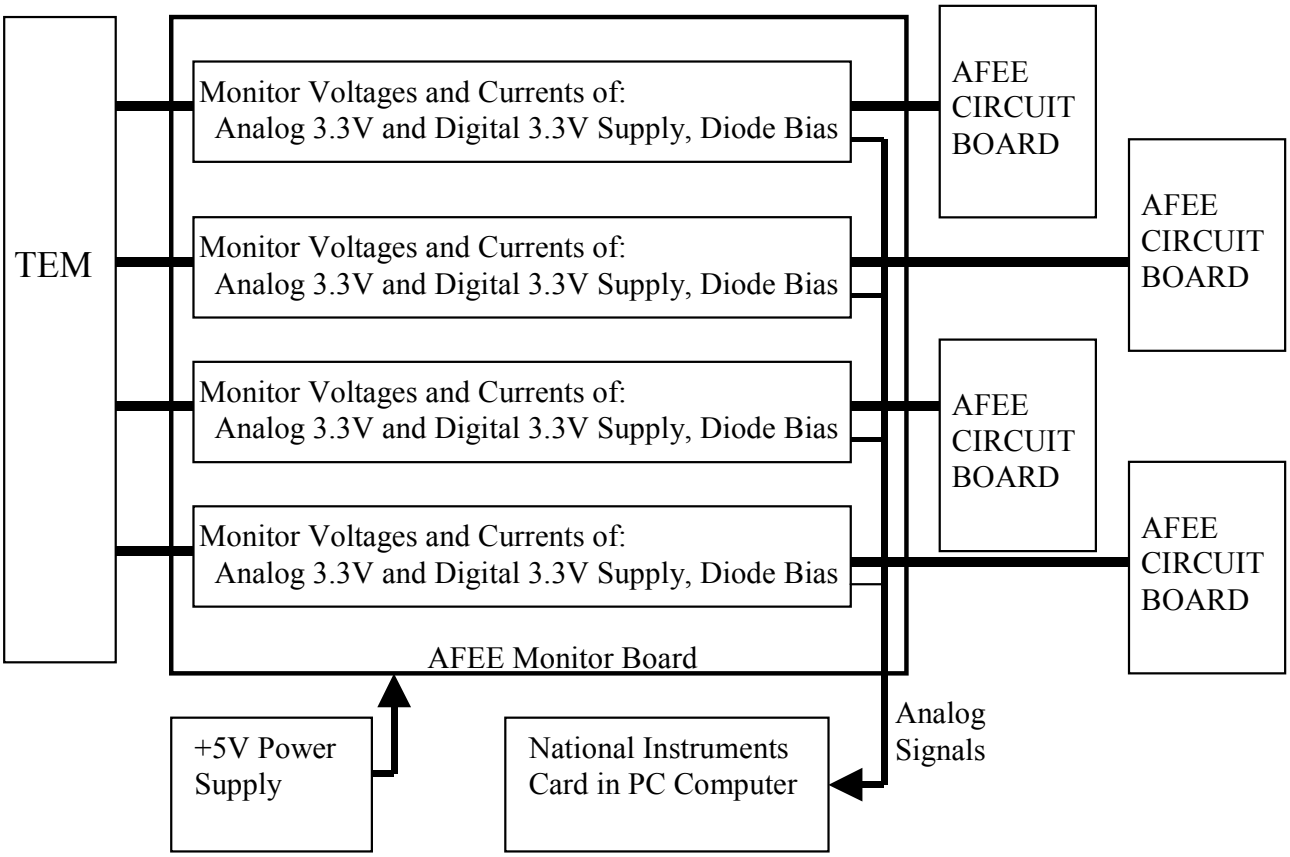

Figure 2 – AFEE Monitor Board Connection Diagram

The AFEE Montior Board enables monitoring of each AFEE Board supply voltage and currents. The voltages and currents are periodically logged by the connected PC computer.

The AFEE Monitor board has jumpers and Test Points for each signal and supply voltage line connection to the TEM (Figure 3). Same net power and return lines are connected together on the AFEE side of the jumper. The test point are on the AFEE side of the jumper as well. If a jumper is removed the test point measures the disconnected AFEE board side of the line, and the jumper pin away from the test point measures the TEM side of the line.

The power supply retuns from all the AFEE boards are effectivly connected together and to the AFEE Monitor power supply ground. This is needed to accuratly report the voltages and currents from each AFEE board.

Figure 3. AFEE Monitor Board Jumpers and Test Points for one AFEE-TEM Connector.

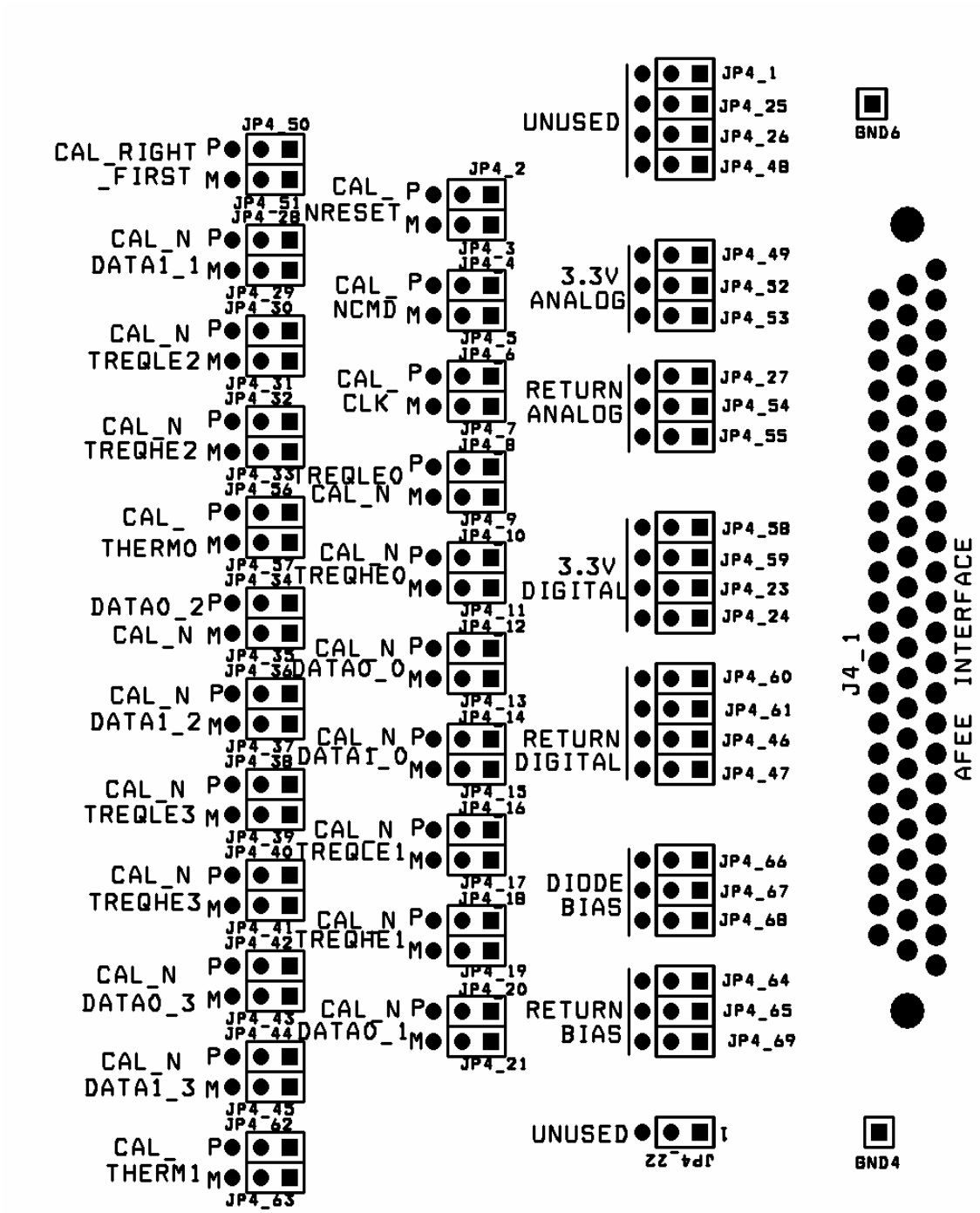

4 TEM CONNECTION TEST DESCRIPTION

Prior to connecting any flight AFEE boards to a received TEM, the TEM connections must first be tested as follows:

1) Check TEM Connections un-powered
2) Check TEM Connections Powered, with no load.
3) Check TEM Power supplies with resistive loads.
4) Check TEM power supplies and signal lines with known-good AFEE board.

4.1 Unpowered TEM Connections Checkout

Procedure:

1) Mark Table 1– Table 8 sheets with TEM serial numbers and date.
2) Attach AFEE Monitor box to TEM through four 69 contact Micro-D connector-cables which are part of the AFEE Monitor box.
3) From the AFEE Monitor box, remove power and ground jumpers from all four TEM connections. The jumper groups to be removed are labeled as:
    a. 3.3V Digital and Return Digital
    b. 3.3V Analog and Return Analog
    c. Diode Bias and Return Bias
4) Probe first TEM connector Signal and Supply Returns for proper continuity (Table 1). Using hand-held calibrated voltmeter in resistance measurement mode, probe exposed jumper pin away from corresponding test point for each test. Negative lead of the meter should contact the TEM box case.
5) Probe first TEM connector Signals for proper continuity (Table 1). Use handheld calibrated voltmeter in resistance measurement mode. For TEM signals, probe testpoint corresponding with each signal. For supply voltages, probe exposed jumper pin away from corresponding test point. Negative lead of the meter should contact the TEM box case.
6) Repeat steps 4 and 5 for other three TEM connectors, filling in Table 3 - Table 8.

Table 1. TEM Unpowered Measurements, Low Impedance-to-Ground Pins. AFEE Monitor box jumpers removed for thse signals, probe corresponding jumper pin away from testpoint.

TEM Ser. No.	**TEM Connector:**	**Date:**	
Pin Number	**Signal**	**Measured Resistance to TEM case ground.**	**Expected Resistance**
1	Unused, TEM Gnd		< 1.0 ohm
25	Unused, TEM Gnd		< 1.0 ohm
26	Unused, TEM Gnd		< 1.0 ohm
48	Unused, TEM Gnd		< 1.0 ohm
27	ANA RET (1)		< 1.0 ohm
54	ANA RET (2)		< 1.0 ohm
55	ANA RET (3)		< 1.0 ohm
60	DIG RET (1)		< 1.0 ohm
61	DIG RET (2)		< 1.0 ohm
46	DIG RET (3)		< 1.0 ohm
47	DIG RET (4)		< 1.0 ohm
64	BIAS RET (1)		< 1.0 ohm
65	BIAS RET (2)		< 1.0 ohm
69	BIAS RET (3)		< 1.0 ohm
51	CAL_RIGHT_FIRST RET M		< 1.0 ohm

Table 2. TEM Unpowered Measurements, High Impedance-to-Ground Pins. Supply pins measured at jumper pin away from test point.

TEM Ser. No.		**TEM Connector:**	**Date:**
No.	**Signal**	**Measured Resistance to TEM Gnd**	**Expected ResistanceValue**
2	CAL_NRESETP		1 Meg ohm < Meas < 9 Meg ohm
3	CAL_NRESETM		1 Meg ohm < Meas < 9 Meg ohm
4	CAL_NCMDP		1 Meg ohm < Meas < 9 Meg ohm
5	CAL_NCMDM		1 Meg ohm < Meas < 9 Meg ohm
6	CAL_CLKP		1 Meg ohm < Meas < 9 Meg ohm
7	CAL_CLKM		1 Meg ohm < Meas < 9 Meg ohm
8	CAL_NTREQLE0P		1 Meg ohm < Meas < 9 Meg ohm
9	CAL_NTREQLE0M		1 Meg ohm < Meas < 9 Meg ohm
10	CAL_NTREQHE0P		1 Meg ohm < Meas < 9 Meg ohm
11	CAL_NTREQHE0M		1 Meg ohm < Meas < 9 Meg ohm
12	CAL_NDATA0_0P		1 Meg ohm < Meas < 9 Meg ohm
13	CAL_NDATA0_0M		1 Meg ohm < Meas < 9 Meg ohm
14	CAL_NDATA1_0P		1 Meg ohm < Meas < 9 Meg ohm
15	CAL_NDATA1_0M		1 Meg ohm < Meas < 9 Meg ohm
16	CAL_NTREQLE1P		1 Meg ohm < Meas < 9 Meg ohm
17	CAL_NTREQLE1M		1 Meg ohm < Meas < 9 Meg ohm
18	CAL_NTREQHE1P		1 Meg ohm < Meas < 9 Meg ohm
19	CAL_NTREQHE1M		1 Meg ohm < Meas < 9 Meg ohm
20	CAL_NDATA0_1P		1 Meg ohm < Meas < 9 Meg ohm
21	CAL_NDATA0_1M		1 Meg ohm < Meas < 9 Meg ohm
50	CAL_RIGHT_FIRST P		1 Meg ohm < Meas < 9 Meg ohm
28	CAL_NDATA1_1P		1 Meg ohm < Meas < 9 Meg ohm
29	CAL_NDATA1_1M		1 Meg ohm < Meas < 9 Meg ohm
30	CAL_NTREQLE2P		1 Meg ohm < Meas < 9 Meg ohm
31	CAL_NTREQLE2M		1 Meg ohm < Meas < 9 Meg ohm
32	CAL_NTREQHE2P		1 Meg ohm < Meas < 9 Meg ohm
33	CAL_NTREQHE2M		1 Meg ohm < Meas < 9 Meg ohm

TEM Ser. No.		TEM Connector:	Date:
No.	**Signal**	**Measured Resistance to TEM Gnd**	**Expected ResistanceValue**
56	CAL_THERM0P		1 K ohm < Meas < 5 K ohm
57	CAL_THERM0M		50 K ohm < Meas < 150 K ohm
34	CAL_NDATA0_2P		1 Meg ohm < Meas < 9 Meg ohm
35	CAL_NDATA0_2M		1 Meg ohm < Meas < 9 Meg ohm
36	CAL_NDATA1_2P		1 Meg ohm < Meas < 9 Meg ohm
37	CAL_NDATA1_2M		1 Meg ohm < Meas < 9 Meg ohm
38	CAL_NTREQLE3P		1 Meg ohm < Meas < 9 Meg ohm
39	CAL_NTREQLE3M		1 Meg ohm < Meas < 9 Meg ohm
40	CAL_NTREQHE3P		1 Meg ohm < Meas < 9 Meg ohm
41	CAL_NTREQHE3M		1 Meg ohm < Meas < 9 Meg ohm
42	CAL_NDATA0_3P		1 Meg ohm < Meas < 9 Meg ohm
43	CAL_NDATA0_3M		1 Meg ohm < Meas < 9 Meg ohm
44	CAL_NDATA1_3P		1 Meg ohm < Meas < 9 Meg ohm
45	CAL_NDATA1_3M		1 Meg ohm < Meas < 9 Meg ohm
62	CAL_THERM1P		1 K ohm < Meas < 5 K ohm
63	CAL_THERM1M		50 K ohm < Meas < 150 K ohm
52	3.3V ANALOG (1)		2 K ohm < Meas < 5 K ohm
53	3.3V ANALOG (2)		2 K ohm < Meas < 5 K ohm
49	3.3V ANALOG (3)		2 K ohm < Meas < 5 K ohm
58	3.3V DIGITAL (1)		2 K ohm < Meas < 5 K ohm
59	3.3V DIGITAL (2)		2 K ohm < Meas < 5 K ohm
23	3.3V DIGITAL (3)		2 K ohm < Meas < 5 K ohm
24	3.3V DIGITAL (4)		2 K ohm < Meas < 5 K ohm
66	BIAS VOLTAGE (1)		200 K < Meas < 500 K ohm
67	BIAS VOLTAGE (2)		200 K < Meas < 500 K ohm
68	BIAS VOLTAGE (3)		200 K < Meas < 500 K ohm

Table 3. TEM Unpowered Measurements, Low Impedance-to-Ground Pins. AFEE Monitor box jumpers removed for thse signals, probe corresponding jumper pin away from testpoint.

TEM Ser. No.	**TEM Connector:**	**Date:**	
Pin Number	**Signal**	**Measured Resistance to TEM case ground.**	**Expected Resistance**
1	Unused, TEM Gnd		< 1.0 ohm
25	Unused, TEM Gnd		< 1.0 ohm
26	Unused, TEM Gnd		< 1.0 ohm
48	Unused, TEM Gnd		< 1.0 ohm
27	ANA RET (1)		< 1.0 ohm
54	ANA RET (2)		< 1.0 ohm
55	ANA RET (3)		< 1.0 ohm
60	DIG RET (1)		< 1.0 ohm
61	DIG RET (2)		< 1.0 ohm
46	DIG RET (3)		< 1.0 ohm
47	DIG RET (4)		< 1.0 ohm
64	BIAS RET (1)		< 1.0 ohm
65	BIAS RET (2)		< 1.0 ohm
69	BIAS RET (3)		< 1.0 ohm
51	CAL_RIGHT_FIRST RET M		< 1.0 ohm

Table 4. TEM Unpowered Measurements, High Impedance-to-Ground Pins. Supply pins measured at jumper pin away from test point.

TEM Ser. No.		**TEM Connector:**	**Date:**
No.	**Signal**	**Measured Resistance to TEM Gnd**	**Expected ResistanceValue**
2	CAL_NRESETP		1 Meg ohm < Meas < 9 Meg ohm
3	CAL_NRESETM		1 Meg ohm < Meas < 9 Meg ohm
4	CAL_NCMDP		1 Meg ohm < Meas < 9 Meg ohm
5	CAL_NCMDM		1 Meg ohm < Meas < 9 Meg ohm
6	CAL_CLKP		1 Meg ohm < Meas < 9 Meg ohm
7	CAL_CLKM		1 Meg ohm < Meas < 9 Meg ohm
8	CAL_NTREQLE0P		1 Meg ohm < Meas < 9 Meg ohm
9	CAL_NTREQLE0M		1 Meg ohm < Meas < 9 Meg ohm
10	CAL_NTREQHE0P		1 Meg ohm < Meas < 9 Meg ohm
11	CAL_NTREQHE0M		1 Meg ohm < Meas < 9 Meg ohm
12	CAL_NDATA0_0P		1 Meg ohm < Meas < 9 Meg ohm
13	CAL_NDATA0_0M		1 Meg ohm < Meas < 9 Meg ohm
14	CAL_NDATA1_0P		1 Meg ohm < Meas < 9 Meg ohm
15	CAL_NDATA1_0M		1 Meg ohm < Meas < 9 Meg ohm
16	CAL_NTREQLE1P		1 Meg ohm < Meas < 9 Meg ohm
17	CAL_NTREQLE1M		1 Meg ohm < Meas < 9 Meg ohm
18	CAL_NTREQHE1P		1 Meg ohm < Meas < 9 Meg ohm
19	CAL_NTREQHE1M		1 Meg ohm < Meas < 9 Meg ohm
20	CAL_NDATA0_1P		1 Meg ohm < Meas < 9 Meg ohm
21	CAL_NDATA0_1M		1 Meg ohm < Meas < 9 Meg ohm
50	CAL_RIGHT_FIRST P		1 Meg ohm < Meas < 9 Meg ohm
28	CAL_NDATA1_1P		1 Meg ohm < Meas < 9 Meg ohm
29	CAL_NDATA1_1M		1 Meg ohm < Meas < 9 Meg ohm
30	CAL_NTREQLE2P		1 Meg ohm < Meas < 9 Meg ohm
31	CAL_NTREQLE2M		1 Meg ohm < Meas < 9 Meg ohm
32	CAL_NTREQHE2P		1 Meg ohm < Meas < 9 Meg ohm
33	CAL_NTREQHE2M		1 Meg ohm < Meas < 9 Meg ohm

TEM Ser. No.		TEM Connector:	Date:
No.	**Signal**	**Measured Resistance to TEM Gnd**	**Expected ResistanceValue**
56	CAL_THERM0P		1 K ohm < Meas < 5 K ohm
57	CAL_THERM0M		50 K ohm < Meas < 150 K ohm
34	CAL_NDATA0_2P		1 Meg ohm < Meas < 9 Meg ohm
35	CAL_NDATA0_2M		1 Meg ohm < Meas < 9 Meg ohm
36	CAL_NDATA1_2P		1 Meg ohm < Meas < 9 Meg ohm
37	CAL_NDATA1_2M		1 Meg ohm < Meas < 9 Meg ohm
38	CAL_NTREQLE3P		1 Meg ohm < Meas < 9 Meg ohm
39	CAL_NTREQLE3M		1 Meg ohm < Meas < 9 Meg ohm
40	CAL_NTREQHE3P		1 Meg ohm < Meas < 9 Meg ohm
41	CAL_NTREQHE3M		1 Meg ohm < Meas < 9 Meg ohm
42	CAL_NDATA0_3P		1 Meg ohm < Meas < 9 Meg ohm
43	CAL_NDATA0_3M		1 Meg ohm < Meas < 9 Meg ohm
44	CAL_NDATA1_3P		1 Meg ohm < Meas < 9 Meg ohm
45	CAL_NDATA1_3M		1 Meg ohm < Meas < 9 Meg ohm
62	CAL_THERM1P		1 K ohm < Meas < 5 K ohm
63	CAL_THERM1M		50 K ohm < Meas < 150 K ohm
52	3.3V ANALOG (1)		2 K ohm < Meas < 5 K ohm
53	3.3V ANALOG (2)		2 K ohm < Meas < 5 K ohm
49	3.3V ANALOG (3)		2 K ohm < Meas < 5 K ohm
58	3.3V DIGITAL (1)		2 K ohm < Meas < 5 K ohm
59	3.3V DIGITAL (2)		2 K ohm < Meas < 5 K ohm
23	3.3V DIGITAL (3)		2 K ohm < Meas < 5 K ohm
24	3.3V DIGITAL (4)		2 K ohm < Meas < 5 K ohm
66	BIAS VOLTAGE (1)		200 K < Meas < 500 K ohm
67	BIAS VOLTAGE (2)		200 K < Meas < 500 K ohm
68	BIAS VOLTAGE (3)		200 K < Meas < 500 K ohm

Table 5. TEM Unpowered Measurements, Low Impedance-to-Ground Pins. AFEE Monitor box jumpers removed for thse signals, probe corresponding jumper pin away from testpoint.

TEM Ser. No.	**TEM Connector:**	**Date:**	
Pin Number	**Signal**	**Measured Resistance to TEM case ground.**	**Expected Resistance**
1	Unused, TEM Gnd		< 1.0 ohm
25	Unused, TEM Gnd		< 1.0 ohm
26	Unused, TEM Gnd		< 1.0 ohm
48	Unused, TEM Gnd		< 1.0 ohm
27	ANA RET (1)		< 1.0 ohm
54	ANA RET (2)		< 1.0 ohm
55	ANA RET (3)		< 1.0 ohm
60	DIG RET (1)		< 1.0 ohm
61	DIG RET (2)		< 1.0 ohm
46	DIG RET (3)		< 1.0 ohm
47	DIG RET (4)		< 1.0 ohm
64	BIAS RET (1)		< 1.0 ohm
65	BIAS RET (2)		< 1.0 ohm
69	BIAS RET (3)		< 1.0 ohm
51	CAL_RIGHT_FIRST RET M		< 1.0 ohm

Table 6. TEM Unpowered Measurements, High Impedance-to-Ground Pins. Supply pins measured at jumper pin away from test point.

TEM Ser. No.		**TEM Connector:**	**Date:**
No.	**Signal**	**Measured Resistance to TEM Gnd**	**Expected ResistanceValue**
2	CAL_NRESETP		1 Meg ohm < Meas < 9 Meg ohm
3	CAL_NRESETM		1 Meg ohm < Meas < 9 Meg ohm
4	CAL_NCMDP		1 Meg ohm < Meas < 9 Meg ohm
5	CAL_NCMDM		1 Meg ohm < Meas < 9 Meg ohm
6	CAL_CLKP		1 Meg ohm < Meas < 9 Meg ohm
7	CAL_CLKM		1 Meg ohm < Meas < 9 Meg ohm
8	CAL_NTREQLE0P		1 Meg ohm < Meas < 9 Meg ohm
9	CAL_NTREQLE0M		1 Meg ohm < Meas < 9 Meg ohm
10	CAL_NTREQHE0P		1 Meg ohm < Meas < 9 Meg ohm
11	CAL_NTREQHE0M		1 Meg ohm < Meas < 9 Meg ohm
12	CAL_NDATA0_0P		1 Meg ohm < Meas < 9 Meg ohm
13	CAL_NDATA0_0M		1 Meg ohm < Meas < 9 Meg ohm
14	CAL_NDATA1_0P		1 Meg ohm < Meas < 9 Meg ohm
15	CAL_NDATA1_0M		1 Meg ohm < Meas < 9 Meg ohm
16	CAL_NTREQLE1P		1 Meg ohm < Meas < 9 Meg ohm
17	CAL_NTREQLE1M		1 Meg ohm < Meas < 9 Meg ohm
18	CAL_NTREQHE1P		1 Meg ohm < Meas < 9 Meg ohm
19	CAL_NTREQHE1M		1 Meg ohm < Meas < 9 Meg ohm
20	CAL_NDATA0_1P		1 Meg ohm < Meas < 9 Meg ohm
21	CAL_NDATA0_1M		1 Meg ohm < Meas < 9 Meg ohm
50	CAL_RIGHT_FIRST P		1 Meg ohm < Meas < 9 Meg ohm
28	CAL_NDATA1_1P		1 Meg ohm < Meas < 9 Meg ohm
29	CAL_NDATA1_1M		1 Meg ohm < Meas < 9 Meg ohm
30	CAL_NTREQLE2P		1 Meg ohm < Meas < 9 Meg ohm
31	CAL_NTREQLE2M		1 Meg ohm < Meas < 9 Meg ohm
32	CAL_NTREQHE2P		1 Meg ohm < Meas < 9 Meg ohm
33	CAL_NTREQHE2M		1 Meg ohm < Meas < 9 Meg ohm

TEM Ser. No.		TEM Connector:	Date:
No.	**Signal**	**Measured Resistance to TEM Gnd**	**Expected ResistanceValue**
56	CAL_THERM0P		1 K ohm < Meas < 5 K ohm
57	CAL_THERM0M		50 K ohm < Meas < 150 K ohm
34	CAL_NDATA0_2P		1 Meg ohm < Meas < 9 Meg ohm
35	CAL_NDATA0_2M		1 Meg ohm < Meas < 9 Meg ohm
36	CAL_NDATA1_2P		1 Meg ohm < Meas < 9 Meg ohm
37	CAL_NDATA1_2M		1 Meg ohm < Meas < 9 Meg ohm
38	CAL_NTREQLE3P		1 Meg ohm < Meas < 9 Meg ohm
39	CAL_NTREQLE3M		1 Meg ohm < Meas < 9 Meg ohm
40	CAL_NTREQHE3P		1 Meg ohm < Meas < 9 Meg ohm
41	CAL_NTREQHE3M		1 Meg ohm < Meas < 9 Meg ohm
42	CAL_NDATA0_3P		1 Meg ohm < Meas < 9 Meg ohm
43	CAL_NDATA0_3M		1 Meg ohm < Meas < 9 Meg ohm
44	CAL_NDATA1_3P		1 Meg ohm < Meas < 9 Meg ohm
45	CAL_NDATA1_3M		1 Meg ohm < Meas < 9 Meg ohm
62	CAL_THERM1P		1 K ohm < Meas < 5 K ohm
63	CAL_THERM1M		50 K ohm < Meas < 150 K ohm
52	3.3V ANALOG (1)		2 K ohm < Meas < 5 K ohm
53	3.3V ANALOG (2)		2 K ohm < Meas < 5 K ohm
49	3.3V ANALOG (3)		2 K ohm < Meas < 5 K ohm
58	3.3V DIGITAL (1)		2 K ohm < Meas < 5 K ohm
59	3.3V DIGITAL (2)		2 K ohm < Meas < 5 K ohm
23	3.3V DIGITAL (3)		2 K ohm < Meas < 5 K ohm
24	3.3V DIGITAL (4)		2 K ohm < Meas < 5 K ohm
66	BIAS VOLTAGE (1)		200 K < Meas < 500 K ohm
67	BIAS VOLTAGE (2)		200 K < Meas < 500 K ohm
68	BIAS VOLTAGE (3)		200 K < Meas < 500 K ohm

Table 7. TEM Unpowered Measurements, Low Impedance-to-Ground Pins. AFEE Monitor box jumpers removed for thse signals, probe corresponding jumper pin away from testpoint.

TEM Ser. No.	**TEM Connector:**	**Date:**	
Pin Number	**Signal**	**Measured Resistance to TEM case ground.**	**Expected Resistance**
1	Unused, TEM Gnd		< 1.0 ohm
25	Unused, TEM Gnd		< 1.0 ohm
26	Unused, TEM Gnd		< 1.0 ohm
48	Unused, TEM Gnd		< 1.0 ohm
27	ANA RET (1)		< 1.0 ohm
54	ANA RET (2)		< 1.0 ohm
55	ANA RET (3)		< 1.0 ohm
60	DIG RET (1)		< 1.0 ohm
61	DIG RET (2)		< 1.0 ohm
46	DIG RET (3)		< 1.0 ohm
47	DIG RET (4)		< 1.0 ohm
64	BIAS RET (1)		< 1.0 ohm
65	BIAS RET (2)		< 1.0 ohm
69	BIAS RET (3)		< 1.0 ohm
51	CAL_RIGHT_FIRST RET M		< 1.0 ohm

Table 8. TEM Unpowered Measurements, High Impedance-to-Ground Pins. Supply pins measured at jumper pin away from test point.

TEM Ser. No.		**TEM Connector:**	**Date:**
No.	**Signal**	**Measured Resistance to TEM Gnd**	**Expected ResistanceValue**
2	CAL_NRESETP		1 Meg ohm < Meas < 9 Meg ohm
3	CAL_NRESETM		1 Meg ohm < Meas < 9 Meg ohm
4	CAL_NCMDP		1 Meg ohm < Meas < 9 Meg ohm
5	CAL_NCMDM		1 Meg ohm < Meas < 9 Meg ohm
6	CAL_CLKP		1 Meg ohm < Meas < 9 Meg ohm
7	CAL_CLKM		1 Meg ohm < Meas < 9 Meg ohm
8	CAL_NTREQLE0P		1 Meg ohm < Meas < 9 Meg ohm
9	CAL_NTREQLE0M		1 Meg ohm < Meas < 9 Meg ohm
10	CAL_NTREQHE0P		1 Meg ohm < Meas < 9 Meg ohm
11	CAL_NTREQHE0M		1 Meg ohm < Meas < 9 Meg ohm
12	CAL_NDATA0_0P		1 Meg ohm < Meas < 9 Meg ohm
13	CAL_NDATA0_0M		1 Meg ohm < Meas < 9 Meg ohm
14	CAL_NDATA1_0P		1 Meg ohm < Meas < 9 Meg ohm
15	CAL_NDATA1_0M		1 Meg ohm < Meas < 9 Meg ohm
16	CAL_NTREQLE1P		1 Meg ohm < Meas < 9 Meg ohm
17	CAL_NTREQLE1M		1 Meg ohm < Meas < 9 Meg ohm
18	CAL_NTREQHE1P		1 Meg ohm < Meas < 9 Meg ohm
19	CAL_NTREQHE1M		1 Meg ohm < Meas < 9 Meg ohm
20	CAL_NDATA0_1P		1 Meg ohm < Meas < 9 Meg ohm
21	CAL_NDATA0_1M		1 Meg ohm < Meas < 9 Meg ohm
50	CAL_RIGHT_FIRST P		1 Meg ohm < Meas < 9 Meg ohm
28	CAL_NDATA1_1P		1 Meg ohm < Meas < 9 Meg ohm
29	CAL_NDATA1_1M		1 Meg ohm < Meas < 9 Meg ohm
30	CAL_NTREQLE2P		1 Meg ohm < Meas < 9 Meg ohm
31	CAL_NTREQLE2M		1 Meg ohm < Meas < 9 Meg ohm
32	CAL_NTREQHE2P		1 Meg ohm < Meas < 9 Meg ohm
33	CAL_NTREQHE2M		1 Meg ohm < Meas < 9 Meg ohm

TEM Ser. No.		TEM Connector:	Date:
No.	**Signal**	**Measured Resistance to TEM Gnd**	**Expected ResistanceValue**
56	CAL_THERM0P		1 K ohm < Meas < 5 K ohm
57	CAL_THERM0M		50 K ohm < Meas < 150 K ohm
34	CAL_NDATA0_2P		1 Meg ohm < Meas < 9 Meg ohm
35	CAL_NDATA0_2M		1 Meg ohm < Meas < 9 Meg ohm
36	CAL_NDATA1_2P		1 Meg ohm < Meas < 9 Meg ohm
37	CAL_NDATA1_2M		1 Meg ohm < Meas < 9 Meg ohm
38	CAL_NTREQLE3P		1 Meg ohm < Meas < 9 Meg ohm
39	CAL_NTREQLE3M		1 Meg ohm < Meas < 9 Meg ohm
40	CAL_NTREQHE3P		1 Meg ohm < Meas < 9 Meg ohm
41	CAL_NTREQHE3M		1 Meg ohm < Meas < 9 Meg ohm
42	CAL_NDATA0_3P		1 Meg ohm < Meas < 9 Meg ohm
43	CAL_NDATA0_3M		1 Meg ohm < Meas < 9 Meg ohm
44	CAL_NDATA1_3P		1 Meg ohm < Meas < 9 Meg ohm
45	CAL_NDATA1_3M		1 Meg ohm < Meas < 9 Meg ohm
62	CAL_THERM1P		1 K ohm < Meas < 5 K ohm
63	CAL_THERM1M		50 K ohm < Meas < 150 K ohm
52	3.3V ANALOG (1)		2 K ohm < Meas < 5 K ohm
53	3.3V ANALOG (2)		2 K ohm < Meas < 5 K ohm
49	3.3V ANALOG (3)		2 K ohm < Meas < 5 K ohm
58	3.3V DIGITAL (1)		2 K ohm < Meas < 5 K ohm
59	3.3V DIGITAL (2)		2 K ohm < Meas < 5 K ohm
23	3.3V DIGITAL (3)		2 K ohm < Meas < 5 K ohm
24	3.3V DIGITAL (4)		2 K ohm < Meas < 5 K ohm
66	BIAS VOLTAGE (1)		200 K < Meas < 500 K ohm
67	BIAS VOLTAGE (2)		200 K < Meas < 500 K ohm
68	BIAS VOLTAGE (3)		200 K < Meas < 500 K ohm

4.2 Powered TEM Connections Checkout

Procedure:

1) Mark Table 9 – Table 16 sheets with TEM serial numbers and date
2) Attached AFEE Monitor box to TEM through four 69 contact Micro-D connectors which are part of the AFEE Monitor box.
3) From the AFEE Monitor box, remove power and ground jumpers from each TEM connection. The jumpers to be removed are labeled as:
    a. 3.3V Digital and Return Digital
    b. 3.3V Analog and Return Analog
    c. Diode Bias and Return Bias
4) Power up TEM. Command TEM to Power AFEE boards. Command AFEE Bias Supply to +70 Volts.
5) Probe first TEM connection power supply jumper pins and return jumper pins for proper voltage as noted in Table 9. Note that when probing supplies and returns with removed jumpers, probe the exposed jumper pin away from corresponding test point.
6) Probe first TEM connection TEM signal test points, as indicated in Table 10, for allowable voltage range.
7) Repeat steps 5 and 6 for other three TEM connections, completing tables Table 11 to Table 16.
8) Power down the TEM.

Table 9. TEM Powered Measurements, No Load. Measure supply and retun lines at jumper pin away from testpoint.

TEM Ser. No.		**TEM Connector:**		**Date:**	
Pin Number	**Signal**	**Measured DC Voltage to TEM case ground.**	**Expected DC Voltage**	**Measured AC Voltage to TEM case ground.**	**Expected AC Voltage**
49	3.3V ANALOG (1)		3.2 < Meas < 3.5 V		< 5 mV
52	3.3V ANALOG (2)		3.2 < Meas < 3.5 V		< 5 mV
53	3.3V ANALOG (3)		3.2 < Meas < 3.5 V		< 5 mV
58	3.3V DIGITAL (1)		3.2 < Meas < 3.5 V		< 5 mV
59	3.3V DIGITAL (2)		3.2 < Meas < 3.5 V		< 5 mV
23	3.3V DIGITAL (3)		3.2 < Meas < 3.5 V		< 5 mV
24	3.3V DIGITAL (4)		3.2 < Meas < 3.5 V		< 5 mV
66	BIAS VOLTAGE (1)		74 < Meas < 80V		< 5 mV
67	BIAS VOLTAGE (2)		74 < Meas < 80V		< 5 mV
68	BIAS VOLTAGE (3)		74 < Meas < 80V		< 5 mV
1	Unused, TEM Gnd		< 0.5 V	Not Measured	
25	Unused, TEM Gnd		< 0.5 V		
26	Unused, TEM Gnd		< 0.5 V		
48	Unused, TEM Gnd		< 0.5 V		
27	ANA RET (1)		< 0.5 V		
54	ANA RET (2)		< 0.5 V		
55	ANA RET (3)		< 0.5 V		
60	DIG RET (1)		< 0.5 V		
61	DIG RET (2)		< 0.5 V		
46	DIG RET (3)		< 0.5 V		
47	DIG RET (4)		< 0.5 V		
64	BIAS RET (1)		< 0.5 V		
65	BIAS RET (2)		< 0.5 V		
69	BIAS RET (3)		< 0.5 V		
51	CAL_RIGHT_FIRST M		< 0.5 V		

Table 10. TEM Powered Measurements, Signal Testpoints, no load. Voltages expected between zero and 3.3 volts.

TEM Ser. No.	**TEM Connector:**		**Date:**
No.	**Signal**	**Measured DC Voltage to TEM Gnd**	**Expected DC Voltage**
2	CAL_NRESETP		0.5 < Meas < 3.0 V
3	CAL_NRESETM		0.5 < Meas < 3.0 V
4	CAL_NCMDP		0.5 < Meas < 3.0 V
5	CAL_NCMDM		0.5 < Meas < 3.0 V
6	CAL_CLKP		0.5 < Meas < 3.0 V
7	CAL_CLKM		0.5 < Meas < 3.0 V
8	CAL_NTREQLE0P		0.5 < Meas < 3.0 V
9	CAL_NTREQLE0M		0.5 < Meas < 3.0 V
10	CAL_NTREQHE0P		0.5 < Meas < 3.0 V
11	CAL_NTREQHE0M		0.5 < Meas < 3.0 V
12	CAL_NDATA0_0P		0.5 < Meas < 3.0 V
13	CAL_NDATA0_0M		0.5 < Meas < 3.0 V
14	CAL_NDATA1_0P		0.5 < Meas < 3.0 V
15	CAL_NDATA1_0M		0.5 < Meas < 3.0 V
16	CAL_NTREQLE1P		0.5 < Meas < 3.0 V
17	CAL_NTREQLE1M		0.5 < Meas < 3.0 V
18	CAL_NTREQHE1P		0.5 < Meas < 3.0 V
19	CAL_NTREQHE1M		0.5 < Meas < 3.0 V
20	CAL_NDATA0_1P		0.5 < Meas < 3.0 V
21	CAL_NDATA0_1M		0.5 < Meas < 3.0 V
50	CAL_RIGHT_FIRST P		0 or 3.3 V
28	CAL_NDATA1_1P		0.5 < Meas < 3.0 V
29	CAL_NDATA1_1M		0.5 < Meas < 3.0 V
30	CAL_NTREQLE2P		0.5 < Meas < 3.0 V
31	CAL_NTREQLE2M		0.5 < Meas < 3.0 V

TEM Ser. No.	**TEM Connector:**		**Date:**
No.	**Signal**	**Measured DC Voltage to TEM Gnd**	**Expected DC Voltage**
32	CAL_NTREQHE2P		0.5 < Meas < 3.0 V
33	CAL_NTREQHE2M		0.5 < Meas < 3.0 V
56	CAL_THERM0P		2.2 < Meas < 3.0 V
57	CAL_THERM0M		0.0 < Meas < 0.2 V
34	CAL_NDATA0_2P		0.5 < Meas < 3.0 V
35	CAL_NDATA0_2M		0.5 < Meas < 3.0 V
36	CAL_NDATA1_2P		0.5 < Meas < 3.0 V
37	CAL_NDATA1_2M		0.5 < Meas < 3.0 V
38	CAL_NTREQLE3P		0.5 < Meas < 3.0 V
39	CAL_NTREQLE3M		0.5 < Meas < 3.0 V
40	CAL_NTREQHE3P		0.5 < Meas < 3.0 V
41	CAL_NTREQHE3M		0.5 < Meas < 3.0 V
42	CAL_NDATA0_3P		0.5 < Meas < 3.0 V
43	CAL_NDATA0_3M		0.5 < Meas < 3.0 V
44	CAL_NDATA1_3P		0.5 < Meas < 3.0 V
45	CAL_NDATA1_3M		0.5 < Meas < 3.0 V
62	CAL_THERM1P		2.2 < Meas < 3.0 V
63	CAL_THERM1M		0.0 < Meas < 0.2 V

Table 11. TEM Powered Measurements, No Load. Measure supply and retun lines at jumper pin away from testpoint.

TEM Ser. No.		**TEM Connector:**		**Date:**	
Pin Number	**Signal**	**Measured DC Voltage to TEM case ground.**	**Expected DC Voltage**	**Measured AC Voltage to TEM case ground.**	**Expected AC Voltage**
49	3.3V ANALOG (1)		3.2 < Meas < 3.5 V		< 5 mV
52	3.3V ANALOG (2)		3.2 < Meas < 3.5 V		< 5 mV
53	3.3V ANALOG (3)		3.2 < Meas < 3.5 V		< 5 mV
58	3.3V DIGITAL (1)		3.2 < Meas < 3.5 V		< 5 mV
59	3.3V DIGITAL (2)		3.2 < Meas < 3.5 V		< 5 mV
23	3.3V DIGITAL (3)		3.2 < Meas < 3.5 V		< 5 mV
24	3.3V DIGITAL (4)		3.2 < Meas < 3.5 V		< 5 mV
66	BIAS VOLTAGE (1)		74 < Meas < 80V		< 5 mV
67	BIAS VOLTAGE (2)		74 < Meas < 80V		< 5 mV
68	BIAS VOLTAGE (3)		74 < Meas < 80V		< 5 mV
1	Unused, TEM Gnd		< 0.5 V	Not Measured	
25	Unused, TEM Gnd		< 0.5 V		
26	Unused, TEM Gnd		< 0.5 V		
48	Unused, TEM Gnd		< 0.5 V		
27	ANA RET (1)		< 0.5 V		
54	ANA RET (2)		< 0.5 V		
55	ANA RET (3)		< 0.5 V		
60	DIG RET (1)		< 0.5 V		
61	DIG RET (2)		< 0.5 V		
46	DIG RET (3)		< 0.5 V		
47	DIG RET (4)		< 0.5 V		
64	BIAS RET (1)		< 0.5 V		
65	BIAS RET (2)		< 0.5 V		
69	BIAS RET (3)		< 0.5 V		
51	CAL_RIGHT_FIRST M		< 0.5 V		

Table 12. TEM Powered Measurements, Signal Testpoints, no load. Voltages expected between zero and 3.3 volts.

TEM Ser. No.	**TEM Connector:**	**Date:**	
No.	**Signal**	**Measured DC Voltage to TEM Gnd**	**Expected DC Voltage**
2	CAL_NRESETP		0.5 < Meas < 3.0 V
3	CAL_NRESETM		0.5 < Meas < 3.0 V
4	CAL_NCMDP		0.5 < Meas < 3.0 V
5	CAL_NCMDM		0.5 < Meas < 3.0 V
6	CAL_CLKP		0.5 < Meas < 3.0 V
7	CAL_CLKM		0.5 < Meas < 3.0 V
8	CAL_NTREQLE0P		0.5 < Meas < 3.0 V
9	CAL_NTREQLE0M		0.5 < Meas < 3.0 V
10	CAL_NTREQHE0P		0.5 < Meas < 3.0 V
11	CAL_NTREQHE0M		0.5 < Meas < 3.0 V
12	CAL_NDATA0_0P		0.5 < Meas < 3.0 V
13	CAL_NDATA0_0M		0.5 < Meas < 3.0 V
14	CAL_NDATA1_0P		0.5 < Meas < 3.0 V
15	CAL_NDATA1_0M		0.5 < Meas < 3.0 V
16	CAL_NTREQLE1P		0.5 < Meas < 3.0 V
17	CAL_NTREQLE1M		0.5 < Meas < 3.0 V
18	CAL_NTREQHE1P		0.5 < Meas < 3.0 V
19	CAL_NTREQHE1M		0.5 < Meas < 3.0 V
20	CAL_NDATA0_1P		0.5 < Meas < 3.0 V
21	CAL_NDATA0_1M		0.5 < Meas < 3.0 V
50	CAL_RIGHT_FIRST P		0 or 3.3 V
28	CAL_NDATA1_1P		0.5 < Meas < 3.0 V
29	CAL_NDATA1_1M		0.5 < Meas < 3.0 V
30	CAL_NTREQLE2P		0.5 < Meas < 3.0 V
31	CAL_NTREQLE2M		0.5 < Meas < 3.0 V
32	CAL_NTREQHE2P		0.5 < Meas < 3.0 V

TEM Ser. No.	**TEM Connector:**		**Date:**
No.	**Signal**	**Measured DC Voltage to TEM Gnd**	**Expected DC Voltage**
33	CAL_NTREQHE2M		0.5 < Meas < 3.0 V
56	CAL_THERM0P		2.2 < Meas < 3.0 V
57	CAL_THERM0M		0.0 < Meas < 0.2 V
34	CAL_NDATA0_2P		0.5 < Meas < 3.0 V
35	CAL_NDATA0_2M		0.5 < Meas < 3.0 V
36	CAL_NDATA1_2P		0.5 < Meas < 3.0 V
37	CAL_NDATA1_2M		0.5 < Meas < 3.0 V
38	CAL_NTREQLE3P		0.5 < Meas < 3.0 V
39	CAL_NTREQLE3M		0.5 < Meas < 3.0 V
40	CAL_NTREQHE3P		0.5 < Meas < 3.0 V
41	CAL_NTREQHE3M		0.5 < Meas < 3.0 V
42	CAL_NDATA0_3P		0.5 < Meas < 3.0 V
43	CAL_NDATA0_3M		0.5 < Meas < 3.0 V
44	CAL_NDATA1_3P		0.5 < Meas < 3.0 V
45	CAL_NDATA1_3M		0.5 < Meas < 3.0 V
62	CAL_THERM1P		2.2 < Meas < 3.0 V
63	CAL_THERM1M		0.0 < Meas < 0.2 V

Table 13. TEM Powered Measurements, No Load. Measure supply and retun lines at jumper pin away from testpoint.

TEM Ser. No.		**TEM Connector:**		**Date:**	
Pin Number	**Signal**	**Measured DC Voltage to TEM case ground.**	**Expected DC Voltage**	**Measured AC Voltage to TEM case ground.**	**Expected AC Voltage**
49	3.3V ANALOG (1)		3.2 < Meas < 3.5 V		< 5 mV
52	3.3V ANALOG (2)		3.2 < Meas < 3.5 V		< 5 mV
53	3.3V ANALOG (3)		3.2 < Meas < 3.5 V		< 5 mV
58	3.3V DIGITAL (1)		3.2 < Meas < 3.5 V		< 5 mV
59	3.3V DIGITAL (2)		3.2 < Meas < 3.5 V		< 5 mV
23	3.3V DIGITAL (3)		3.2 < Meas < 3.5 V		< 5 mV
24	3.3V DIGITAL (4)		3.2 < Meas < 3.5 V		< 5 mV
66	BIAS VOLTAGE (1)		74 < Meas < 80V		< 5 mV
67	BIAS VOLTAGE (2)		74 < Meas < 80V		< 5 mV
68	BIAS VOLTAGE (3)		74 < Meas < 80V		< 5 mV
1	Unused, TEM Gnd		< 0.5 V	Not Measured	
25	Unused, TEM Gnd		< 0.5 V		
26	Unused, TEM Gnd		< 0.5 V		
48	Unused, TEM Gnd		< 0.5 V		
27	ANA RET (1)		< 0.5 V		
54	ANA RET (2)		< 0.5 V		
55	ANA RET (3)		< 0.5 V		
60	DIG RET (1)		< 0.5 V		
61	DIG RET (2)		< 0.5 V		
46	DIG RET (3)		< 0.5 V		
47	DIG RET (4)		< 0.5 V		
64	BIAS RET (1)		< 0.5 V		
65	BIAS RET (2)		< 0.5 V		
69	BIAS RET (3)		< 0.5 V		
51	CAL_RIGHT_FIRST M		< 0.5 V		

Table 14. TEM Powered Measurements, Signal Testpoints, no load. Voltages expected between zero and 3.3 volts.

TEM Ser. No.	**TEM Connector:**	**Date:**	
No.	**Signal**	**Measured DC Voltage to TEM Gnd**	**Expected DC Voltage**
2	CAL_NRESETP		0.5 < Meas < 3.0 V
3	CAL_NRESETM		0.5 < Meas < 3.0 V
4	CAL_NCMDP		0.5 < Meas < 3.0 V
5	CAL_NCMDM		0.5 < Meas < 3.0 V
6	CAL_CLKP		0.5 < Meas < 3.0 V
7	CAL_CLKM		0.5 < Meas < 3.0 V
8	CAL_NTREQLE0P		0.5 < Meas < 3.0 V
9	CAL_NTREQLE0M		0.5 < Meas < 3.0 V
10	CAL_NTREQHE0P		0.5 < Meas < 3.0 V
11	CAL_NTREQHE0M		0.5 < Meas < 3.0 V
12	CAL_NDATA0_0P		0.5 < Meas < 3.0 V
13	CAL_NDATA0_0M		0.5 < Meas < 3.0 V
14	CAL_NDATA1_0P		0.5 < Meas < 3.0 V
15	CAL_NDATA1_0M		0.5 < Meas < 3.0 V
16	CAL_NTREQLE1P		0.5 < Meas < 3.0 V
17	CAL_NTREQLE1M		0.5 < Meas < 3.0 V
18	CAL_NTREQHE1P		0.5 < Meas < 3.0 V
19	CAL_NTREQHE1M		0.5 < Meas < 3.0 V
20	CAL_NDATA0_1P		0.5 < Meas < 3.0 V
21	CAL_NDATA0_1M		0.5 < Meas < 3.0 V
50	CAL_RIGHT_FIRST P		0 or 3.3 V
28	CAL_NDATA1_1P		0.5 < Meas < 3.0 V
29	CAL_NDATA1_1M		0.5 < Meas < 3.0 V
30	CAL_NTREQLE2P		0.5 < Meas < 3.0 V
31	CAL_NTREQLE2M		0.5 < Meas < 3.0 V
32	CAL_NTREQHE2P		0.5 < Meas < 3.0 V

TEM Ser. No.	**TEM Connector:**		**Date:**
No.	**Signal**	**Measured DC Voltage to TEM Gnd**	**Expected DC Voltage**
33	CAL_NTREQHE2M		0.5 < Meas < 3.0 V
56	CAL_THERM0P		2.2 < Meas < 3.0 V
57	CAL_THERM0M		0.0 < Meas < 0.2 V
34	CAL_NDATA0_2P		0.5 < Meas < 3.0 V
35	CAL_NDATA0_2M		0.5 < Meas < 3.0 V
36	CAL_NDATA1_2P		0.5 < Meas < 3.0 V
37	CAL_NDATA1_2M		0.5 < Meas < 3.0 V
38	CAL_NTREQLE3P		0.5 < Meas < 3.0 V
39	CAL_NTREQLE3M		0.5 < Meas < 3.0 V
40	CAL_NTREQHE3P		0.5 < Meas < 3.0 V
41	CAL_NTREQHE3M		0.5 < Meas < 3.0 V
42	CAL_NDATA0_3P		0.5 < Meas < 3.0 V
43	CAL_NDATA0_3M		0.5 < Meas < 3.0 V
44	CAL_NDATA1_3P		0.5 < Meas < 3.0 V
45	CAL_NDATA1_3M		0.5 < Meas < 3.0 V
62	CAL_THERM1P		2.2 < Meas < 3.0 V
63	CAL_THERM1M		0.0 < Meas < 0.2 V

Table 15. TEM Powered Measurements, No Load. Measure supply and retun lines at jumper pin away from testpoint.

TEM Ser. No.		**TEM Connector:**		**Date:**	
Pin Number	**Signal**	**Measured DC Voltage to TEM case ground.**	**Expected DC Voltage**	**Measured AC Voltage to TEM case ground.**	**Expected AC Voltage**
49	3.3V ANALOG (1)		3.2 < Meas < 3.5 V		< 5 mV
52	3.3V ANALOG (2)		3.2 < Meas < 3.5 V		< 5 mV
53	3.3V ANALOG (3)		3.2 < Meas < 3.5 V		< 5 mV
58	3.3V DIGITAL (1)		3.2 < Meas < 3.5 V		< 5 mV
59	3.3V DIGITAL (2)		3.2 < Meas < 3.5 V		< 5 mV
23	3.3V DIGITAL (3)		3.2 < Meas < 3.5 V		< 5 mV
24	3.3V DIGITAL (4)		3.2 < Meas < 3.5 V		< 5 mV
66	BIAS VOLTAGE (1)		74 < Meas < 80V		< 5 mV
67	BIAS VOLTAGE (2)		74 < Meas < 80V		< 5 mV
68	BIAS VOLTAGE (3)		74 < Meas < 80V		< 5 mV
1	Unused, TEM Gnd		< 0.5 V	Not Measured	
25	Unused, TEM Gnd		< 0.5 V		
26	Unused, TEM Gnd		< 0.5 V		
48	Unused, TEM Gnd		< 0.5 V		
27	ANA RET (1)		< 0.5 V		
54	ANA RET (2)		< 0.5 V		
55	ANA RET (3)		< 0.5 V		
60	DIG RET (1)		< 0.5 V		
61	DIG RET (2)		< 0.5 V		
46	DIG RET (3)		< 0.5 V		
47	DIG RET (4)		< 0.5 V		
64	BIAS RET (1)		< 0.5 V		
65	BIAS RET (2)		< 0.5 V		
69	BIAS RET (3)		< 0.5 V		
51	CAL_RIGHT_FIRST M		< 0.5 V		

Table 16. TEM Powered Measurements, Signal Testpoints, no load. Voltages expected between zero and 3.3 volts.

TEM Ser. No.	**TEM Connector:**	**Date:**	
No.	**Signal**	**Measured DC Voltage to TEM Gnd**	**Expected DC Voltage**
2	CAL_NRESETP		0.5 < Meas < 3.0 V
3	CAL_NRESETM		0.5 < Meas < 3.0 V
4	CAL_NCMDP		0.5 < Meas < 3.0 V
5	CAL_NCMDM		0.5 < Meas < 3.0 V
6	CAL_CLKP		0.5 < Meas < 3.0 V
7	CAL_CLKM		0.5 < Meas < 3.0 V
8	CAL_NTREQLE0P		0.5 < Meas < 3.0 V
9	CAL_NTREQLE0M		0.5 < Meas < 3.0 V
10	CAL_NTREQHE0P		0.5 < Meas < 3.0 V
11	CAL_NTREQHE0M		0.5 < Meas < 3.0 V
12	CAL_NDATA0_0P		0.5 < Meas < 3.0 V
13	CAL_NDATA0_0M		0.5 < Meas < 3.0 V
14	CAL_NDATA1_0P		0.5 < Meas < 3.0 V
15	CAL_NDATA1_0M		0.5 < Meas < 3.0 V
16	CAL_NTREQLE1P		0.5 < Meas < 3.0 V
17	CAL_NTREQLE1M		0.5 < Meas < 3.0 V
18	CAL_NTREQHE1P		0.5 < Meas < 3.0 V
19	CAL_NTREQHE1M		0.5 < Meas < 3.0 V
20	CAL_NDATA0_1P		0.5 < Meas < 3.0 V
21	CAL_NDATA0_1M		0.5 < Meas < 3.0 V
50	CAL_RIGHT_FIRST P		0 or 3.3 V
28	CAL_NDATA1_1P		0.5 < Meas < 3.0 V
29	CAL_NDATA1_1M		0.5 < Meas < 3.0 V
30	CAL_NTREQLE2P		0.5 < Meas < 3.0 V
31	CAL_NTREQLE2M		0.5 < Meas < 3.0 V
32	CAL_NTREQHE2P		0.5 < Meas < 3.0 V

TEM Ser. No.	**TEM Connector:**		**Date:**
No.	**Signal**	**Measured DC Voltage to TEM Gnd**	**Expected DC Voltage**
33	CAL_NTREQHE2M		0.5 < Meas < 3.0 V
56	CAL_THERM0P		2.2 < Meas < 3.0 V
57	CAL_THERM0M		0.0 < Meas < 0.2 V
34	CAL_NDATA0_2P		0.5 < Meas < 3.0 V
35	CAL_NDATA0_2M		0.5 < Meas < 3.0 V
36	CAL_NDATA1_2P		0.5 < Meas < 3.0 V
37	CAL_NDATA1_2M		0.5 < Meas < 3.0 V
38	CAL_NTREQLE3P		0.5 < Meas < 3.0 V
39	CAL_NTREQLE3M		0.5 < Meas < 3.0 V
40	CAL_NTREQHE3P		0.5 < Meas < 3.0 V
41	CAL_NTREQHE3M		0.5 < Meas < 3.0 V
42	CAL_NDATA0_3P		0.5 < Meas < 3.0 V
43	CAL_NDATA0_3M		0.5 < Meas < 3.0 V
44	CAL_NDATA1_3P		0.5 < Meas < 3.0 V
45	CAL_NDATA1_3M		0.5 < Meas < 3.0 V
62	CAL_THERM1P		2.2 < Meas < 3.0 V
63	CAL_THERM1M		0.0 < Meas < 0.2 V

4.3 Powered TEM Connections With Resistive Load Checkout

Procedure:

9) Mark Table 17 - **Error! Reference source not found.** sheets with TEM serial numbers and date

10) Make sure AFEE Monitor box is connected to TEM through four 69 contact Micro-D connectors which are part of the AFEE Monitor box.

11) Make sure TEM is powered off.

12) Place power and ground jumpers on the AFEE monitor box, which were previously removed.

13) Place load connector on the AFEE end of AFEE Monitor box cable. Load connectors simulate the AFEE board load current.

    a. 3.3V analog has 35 ohm power resistor load

    b. 3.3V Digital has 15 ohm power resistor load

    c. Diode Bias has 100k ohm load

    d. Cal_Nreset, Cal_NCmd and Cal_Clk differential lines all get 100 ohm loads

    e. 5k ohm load on Right_First

14) Power up TEM. Power up AFEE boards and AFEE Bias Voltage to +75 volts.

15) For first TEM connection, Record loaded supply voltage and ripple in Table 17.

16) For first TEM connection, record loaded TEM output signal voltages in Table 18.

17) For first TEM connection, short separately 3.3V Analog and then 3.3V Digital supply to ground through 1.875 ohm (3 ohm paralleled with 5 ohm) power resistor. Monitor voltage to ensure that TEM fuses particular power and record in Table 19.

    a. Wait and check that TEM fuse recovers after removing short condition.

18) Repeat steps 15, 16 and 17 for other three TEM connections, completing tables Table 20 to Table 28.

19) Store recorded data.

Table 17. TEM Powered Measurements, Supply Voltages, Resistive Load on TEM.

TEM Serial Number:		**Tem Connector:**	**Date:**	
Signal	**Measured DC Voltage to Corresponding Return with handheld voltmeter**	**Expected DC Voltage**	**Measured AC Voltage to Corresponding Return with handheld voltmeter**	**Expected AC Voltage, RMS**
3.3V ANALOG		3.2 < Meas < 3.5V		< 5 mV RMS
3.3V DIGITAL		3.2 < Meas < 3.5V		< 5 mV RMS
BIAS VOLTAGE		68 < Meas < 78V		< 5 mV RMS
RETURN ANALOG		< 5 mV	*Not Measured*	
RETURN DIGITAL		< 5 mV		
BIAS RET		< 5 mV		
CAL_RIGHT_FIRST M		< 5 mV		

Table 18. TEM Powered Measurements, Output Signal Voltages, Resistive Load on TEM.

No.	**Signal**	**Measured DC Voltage to TEM Gnd**	**Expected DC Volgate to TEM Gnd**
2	CAL_NRESETP		0.9< V < 1.4 volts
3	CAL_NRESETM		0.9< V < 1.4 volts
4	CAL_NCMDP		0.9< V < 1.4 volts
5	CAL_NCMDM		0.9< V < 1.4 volts
6	CAL_CLKP		0.9< V < 1.4 volts
7	CAL_CLKM		0.9< V < 1.4 volts
50	CAL_RIGHT_FIRST P		0 or 3.3 volts

Table 19. TEM Powered Measurements, TEM Polyswitch test.

Signal	**Short Supply to Ground through 1.875 ohm resistor. Record time to fuse open.**	**Remove Short. Wait two minutes. Record time to fuse close (voltage recovery).**
3.3V ANALOG		
3.3V DIGITAL		

Table 20. TEM Powered Measurements, Supply Voltages, Resistive Load on TEM.

TEM Serial Number:		**Tem Connector:**	**Date:**	
Signal	**Measured DC Voltage to Corresponding Return with handheld voltmeter**	**Expected DC Voltage**	**Measured AC Voltage to Corresponding Return with handheld voltmeter**	**Expected AC Voltage, RMS**
3.3V ANALOG		3.2 < Meas < 3.5V		< 5 mV RMS
3.3V DIGITAL		3.2 < Meas < 3.5V		< 5 mV RMS
BIAS VOLTAGE		68 < Meas < 78V		< 5 mV RMS
RETURN ANALOG		< 5 mV	*Not Measured*	
RETURN DIGITAL		< 5 mV		
BIAS RET		< 5 mV		
CAL_RIGHT_FIRST M		< 5 mV		

Table 21. TEM Powered Measurements, Output Signal Voltages, Resistive Load on TEM.

No.	**Signal**	**Measured DC Voltage to TEM Gnd**	**Expected DC Volgate to TEM Gnd**
2	CAL_NRESETP		0.9< V < 1.4 volts
3	CAL_NRESETM		0.9< V < 1.4 volts
4	CAL_NCMDP		0.9< V < 1.4 volts
5	CAL_NCMDM		0.9< V < 1.4 volts
6	CAL_CLKP		0.9< V < 1.4 volts
7	CAL_CLKM		0.9< V < 1.4 volts
50	CAL_RIGHT_FIRST P		0 or 3.3 volts

Table 22. TEM Powered Measurements, TEM Polyswitch test.

Signal	**Short Supply to Ground through 1.875 ohm resistor. Record time to fuse open.**	**Remove Short. Wait two minutes. Record time to fuse close (voltage recovery).**
3.3V ANALOG		
3.3V DIGITAL		

Table 23. TEM Powered Measurements, Supply Voltages, Resistive Load on TEM.

TEM Serial Number:		**Tem Connector:**	**Date:**	
Signal	**Measured DC Voltage to Corresponding Return with handheld voltmeter**	**Expected DC Voltage**	**Measured AC Voltage to Corresponding Return with handheld voltmeter**	**Expected AC Voltage, RMS**
3.3V ANALOG		3.2 < Meas < 3.5V		< 5 mV RMS
3.3V DIGITAL		3.2 < Meas < 3.5V		< 5 mV RMS
BIAS VOLTAGE		68 < Meas < 78V		< 5 mV RMS
RETURN ANALOG		< 5 mV	*Not Measured*	
RETURN DIGITAL		< 5 mV		
BIAS RET		< 5 mV		
CAL_RIGHT_FIRST M		< 5 mV		

Table 24. TEM Powered Measurements, Output Signal Voltages, Resistive Load on TEM.

No.	**Signal**	**Measured DC Voltage to TEM Gnd**	**Expected DC Volgate to TEM Gnd**
2	CAL_NRESETP		0.9< V < 1.4 volts
3	CAL_NRESETM		0.9< V < 1.4 volts
4	CAL_NCMDP		0.9< V < 1.4 volts
5	CAL_NCMDM		0.9< V < 1.4 volts
6	CAL_CLKP		0.9< V < 1.4 volts
7	CAL_CLKM		0.9< V < 1.4 volts
50	CAL_RIGHT_FIRST P		0 or 3.3 volts

Table 25. TEM Powered Measurements, TEM Polyswitch test.

Signal	**Short Supply to Ground through 1.875 ohm resistor. Record time to fuse open.**	**Remove Short. Wait two minutes. Record time to fuse close (voltage recovery).**
3.3V ANALOG		
3.3V DIGITAL		

Table 26. TEM Powered Measurements, Supply Voltages, Resistive Load on TEM.

TEM Serial Number:		**Tem Connector:**	**Date:**	
Signal	**Measured DC Voltage to Corresponding Return with handheld voltmeter**	**Expected DC Voltage**	**Measured AC Voltage to Corresponding Return with handheld voltmeter**	**Expected AC Voltage, RMS**
3.3V ANALOG		3.2 < Meas < 3.5V		< 5 mV RMS
3.3V DIGITAL		3.2 < Meas < 3.5V		< 5 mV RMS
BIAS VOLTAGE		68 < Meas < 78V		< 5 mV RMS
RETURN ANALOG		< 5 mV	*Not Measured*	
RETURN DIGITAL		< 5 mV		
BIAS RET		< 5 mV		
CAL_RIGHT_FIRST M		< 5 mV		

Table 27. TEM Powered Measurements, Output Signal Voltages, Resistive Load on TEM.

No.	**Signal**	**Measured DC Voltage to TEM Gnd**	**Expected DC Volgate to TEM Gnd**
2	CAL_NRESETP		0.9< V < 1.4 volts
3	CAL_NRESETM		0.9< V < 1.4 volts
4	CAL_NCMDP		0.9< V < 1.4 volts
5	CAL_NCMDM		0.9< V < 1.4 volts
6	CAL_CLKP		0.9< V < 1.4 volts
7	CAL_CLKM		0.9< V < 1.4 volts
50	CAL_RIGHT_FIRST P		0 or 3.3 volts

Table 28. TEM Powered Measurements, TEM Polyswitch test.

Signal	**Short Supply to Ground through 1.875 ohm resistor. Record time to fuse open.**	**Remove Short. Wait two minutes. Record time to fuse close (voltage recovery).**
3.3V ANALOG		
3.3V DIGITAL		

4.4 Powered TEM with Known Good AFEE board Checkout

Procedure:

1) Mark Table 29 - Table 36 sheets with TEM serial numbers and date
2) Make sure that TEM is powered down.
3) Attached AFEE Monitor box to TEM through four 69 contact Micro-D connectors which are part of the AFEE Monitor box.
4) Make sure that power and ground jumpers are connected on the AFEE monitor box, which were previously removed.
5) Connect known good AFEE board to Monitor Box AFEE connector-cable.
6) Power up TEM. Command TEM to Power AFEE boards. Command AFEE Bias Supply to +70 Volts.
7) For first TEM connection with AFEE board load, probe and record loaded supply voltage and ripple as indicated in Table 29.
8) For same first TEM connection, probe TEM signal test points, as indicated in Table 30, for allowable voltage range.
9) Run automated AFEE board test routine on TEM using AFFE board connected through AFEE Monitor box.
10) Repeat steps 7, 8 and 9 for other three TEM connections, completing Table 31 to Table 36.
11) Power down the TEM.

Table 29. TEM Powered Measurements, Known-Good AFEE Board on TEM.

TEM Serial Number:		**Tem Connector:**	**Date:**	
Signal	**Measured DC Voltage to Corresponding Return with handheld voltmeter**	**Expected DC Voltage**	**Measured AC Voltage to Corresponding Return with handheld voltmeter**	**Expected AC Voltage, RMS**
3.3V ANALOG		3.2 < Meas < 3.5V		< 5 mV RMS
3.3V DIGITAL		3.2 < Meas < 3.5V		< 5 mV RMS
BIAS VOLTAGE		68 < Meas < 78V		< 5 mV RMS
RETURN ANALOG		< 5 mV	*Not Measured*	
RETURN DIGITAL		< 5 mV		
BIAS RET		< 5 mV		
CAL_RIGHT_FIRST M		< 5 mV		

Table 30. TEM Powered Measurements, Known Good AFEE Board Attached.

TEM Serial Number:		**Tem Connector:**	**Date:**
No.	**Signal**	**Measured DC Voltage to TEM Gnd**	**Expected DC Voltage to TEM Gnd**
2	CAL_NRESETP		0.9< V < 1.4 volts
3	CAL_NRESETM		0.9< V < 1.4 volts
4	CAL_NCMDP		0.9< V < 1.4 volts
5	CAL_NCMDM		0.9< V < 1.4 volts
6	CAL_CLKP		0.9< V < 1.4 volts
7	CAL_CLKM		0.9< V < 1.4 volts
8	CAL_NTREQLE0P		0.9< V < 1.4 volts
9	CAL_NTREQLE0M		0.9< V < 1.4 volts
10	CAL_NTREQHE0P		0.9< V < 1.4 volts
11	CAL_NTREQHE0M		0.9< V < 1.4 volts
12	CAL_NDATA0_0P		0.9< V < 1.4 volts
13	CAL_NDATA0_0M		0.9< V < 1.4 volts
14	CAL_NDATA1_0P		0.9< V < 1.4 volts
15	CAL_NDATA1_0M		0.9< V < 1.4 volts
16	CAL_NTREQLE1P		0.9< V < 1.4 volts
17	CAL_NTREQLE1M		0.9< V < 1.4 volts

TEM Serial Number:		Tem Connector:	Date:
No.	**Signal**	**Measured DC Voltage to TEM Gnd**	**Expected DC Voltage to TEM Gnd**
18	CAL_NTREQHE1P		0.9< V < 1.4 volts
19	CAL_NTREQHE1M		0.9< V < 1.4 volts
20	CAL_NDATA0_1P		0.9< V < 1.4 volts
21	CAL_NDATA0_1M		0.9< V < 1.4 volts
50	CAL_RIGHT_FIRST P		0 or 3.3V
28	CAL_NDATA1_1P		0.9< V < 1.4 volts
29	CAL_NDATA1_1M		0.9< V < 1.4 volts
30	CAL_NTREQLE2P		0.9< V < 1.4 volts
31	CAL_NTREQLE2M		0.9< V < 1.4 volts
32	CAL_NTREQHE2P		0.9< V < 1.4 volts
33	CAL_NTREQHE2M		0.9< V < 1.4 volts
56	CAL_THERM0P		2.2 < V < 2.8 volts
57	CAL_THERM0M		1.5 < V < 2.0 volts
34	CAL_NDATA0_2P		0.9< V < 1.4 volts
35	CAL_NDATA0_2M		0.9< V < 1.4 volts
36	CAL_NDATA1_2P		0.9< V < 1.4 volts
37	CAL_NDATA1_2M		0.9< V < 1.4 volts
38	CAL_NTREQLE3P		0.9< V < 1.4 volts
39	CAL_NTREQLE3M		0.9< V < 1.4 volts
40	CAL_NTREQHE3P		0.9< V < 1.4 volts
41	CAL_NTREQHE3M		0.9< V < 1.4 volts
42	CAL_NDATA0_3P		0.9< V < 1.4 volts
43	CAL_NDATA0_3M		0.9< V < 1.4 volts
44	CAL_NDATA1_3P		0.9< V < 1.4 volts
45	CAL_NDATA1_3M		0.9< V < 1.4 volts
62	CAL_THERM1P		2.2 < V < 2.8 volts
63	CAL_THERM1M		1.5 < V < 2.0 volts

Table 31. TEM Powered Measurements, Known-Good AFEE Board on TEM.

TEM Serial Number:		**Tem Connector:**	**Date:**	
Signal	**Measured DC Voltage to Corresponding Return with handheld voltmeter**	**Expected DC Voltage**	**Measured AC Voltage to Corresponding Return with handheld voltmeter**	**Expected AC Voltage, RMS**
3.3V ANALOG		3.2 < Meas < 3.5V		< 5 mV RMS
3.3V DIGITAL		3.2 < Meas < 3.5V		< 5 mV RMS
BIAS VOLTAGE		68 < Meas < 78V		< 5 mV RMS
RETURN ANALOG		< 5 mV	*Not Measured*	
RETURN DIGITAL		< 5 mV		
BIAS RET		< 5 mV		
CAL_RIGHT_FIRST M		< 5 mV		

Table 32. TEM Powered Measurements, Known Good AFEE Board Attached.

TEM Serial Number:		**Tem Connector:**	**Date:**
No.	**Signal**	**Measured DC Voltage to TEM Gnd**	**Expected DC Voltage to TEM Gnd**
2	CAL_NRESETP		0.9< V < 1.4 volts
3	CAL_NRESETM		0.9< V < 1.4 volts
4	CAL_NCMDP		0.9< V < 1.4 volts
5	CAL_NCMDM		0.9< V < 1.4 volts
6	CAL_CLKP		0.9< V < 1.4 volts
7	CAL_CLKM		0.9< V < 1.4 volts
8	CAL_NTREQLE0P		0.9< V < 1.4 volts
9	CAL_NTREQLE0M		0.9< V < 1.4 volts
10	CAL_NTREQHE0P		0.9< V < 1.4 volts
11	CAL_NTREQHE0M		0.9< V < 1.4 volts
12	CAL_NDATA0_0P		0.9< V < 1.4 volts
13	CAL_NDATA0_0M		0.9< V < 1.4 volts
14	CAL_NDATA1_0P		0.9< V < 1.4 volts
15	CAL_NDATA1_0M		0.9< V < 1.4 volts
16	CAL_NTREQLE1P		0.9< V < 1.4 volts
17	CAL_NTREQLE1M		0.9< V < 1.4 volts

TEM Serial Number:		**Tem Connector:**	**Date:**
No.	**Signal**	**Measured DC Voltage to TEM Gnd**	**Expected DC Voltage to TEM Gnd**
18	CAL_NTREQHE1P		0.9< V < 1.4 volts
19	CAL_NTREQHE1M		0.9< V < 1.4 volts
20	CAL_NDATA0_1P		0.9< V < 1.4 volts
21	CAL_NDATA0_1M		0.9< V < 1.4 volts
50	CAL_RIGHT_FIRST P		0 or 3.3V
28	CAL_NDATA1_1P		0.9< V < 1.4 volts
29	CAL_NDATA1_1M		0.9< V < 1.4 volts
30	CAL_NTREQLE2P		0.9< V < 1.4 volts
31	CAL_NTREQLE2M		0.9< V < 1.4 volts
32	CAL_NTREQHE2P		0.9< V < 1.4 volts
33	CAL_NTREQHE2M		0.9< V < 1.4 volts
56	CAL_THERM0P		2.2 < V < 2.8 volts
57	CAL_THERM0M		1.5 < V < 2.0 volts
34	CAL_NDATA0_2P		0.9< V < 1.4 volts
35	CAL_NDATA0_2M		0.9< V < 1.4 volts
36	CAL_NDATA1_2P		0.9< V < 1.4 volts
37	CAL_NDATA1_2M		0.9< V < 1.4 volts
38	CAL_NTREQLE3P		0.9< V < 1.4 volts
39	CAL_NTREQLE3M		0.9< V < 1.4 volts
40	CAL_NTREQHE3P		0.9< V < 1.4 volts
41	CAL_NTREQHE3M		0.9< V < 1.4 volts
42	CAL_NDATA0_3P		0.9< V < 1.4 volts
43	CAL_NDATA0_3M		0.9< V < 1.4 volts
44	CAL_NDATA1_3P		0.9< V < 1.4 volts
45	CAL_NDATA1_3M		0.9< V < 1.4 volts
62	CAL_THERM1P		2.2 < V < 2.8 volts
63	CAL_THERM1M		1.5 < V < 2.0 volts

Table 33. TEM Powered Measurements, Known-Good AFEE Board on TEM.

TEM Serial Number:		**Tem Connector:**	**Date:**	
Signal	**Measured DC Voltage to Corresponding Return with handheld voltmeter**	**Expected DC Voltage**	**Measured AC Voltage to Corresponding Return with handheld voltmeter**	**Expected AC Voltage, RMS**
3.3V ANALOG		3.2 < Meas < 3.5V		< 5 mV RMS
3.3V DIGITAL		3.2 < Meas < 3.5V		< 5 mV RMS
BIAS VOLTAGE		68 < Meas < 78V		< 5 mV RMS
RETURN ANALOG		< 5 mV	*Not Measured*	
RETURN DIGITAL		< 5 mV		
BIAS RET		< 5 mV		
CAL_RIGHT_FIRST M		< 5 mV		

Table 34. TEM Powered Measurements, Known Good AFEE Board Attached.

TEM Serial Number:		**Tem Connector:**	**Date:**
No.	**Signal**	**Measured DC Voltage to TEM Gnd**	**Expected DC Voltage to TEM Gnd**
2	CAL_NRESETP		0.9< V < 1.4 volts
3	CAL_NRESETM		0.9< V < 1.4 volts
4	CAL_NCMDP		0.9< V < 1.4 volts
5	CAL_NCMDM		0.9< V < 1.4 volts
6	CAL_CLKP		0.9< V < 1.4 volts
7	CAL_CLKM		0.9< V < 1.4 volts
8	CAL_NTREQLE0P		0.9< V < 1.4 volts
9	CAL_NTREQLE0M		0.9< V < 1.4 volts
10	CAL_NTREQHE0P		0.9< V < 1.4 volts
11	CAL_NTREQHE0M		0.9< V < 1.4 volts
12	CAL_NDATA0_0P		0.9< V < 1.4 volts
13	CAL_NDATA0_0M		0.9< V < 1.4 volts
14	CAL_NDATA1_0P		0.9< V < 1.4 volts
15	CAL_NDATA1_0M		0.9< V < 1.4 volts
16	CAL_NTREQLE1P		0.9< V < 1.4 volts
17	CAL_NTREQLE1M		0.9< V < 1.4 volts

TEM Serial Number:		Tem Connector:	Date:
No.	**Signal**	**Measured DC Voltage to TEM Gnd**	**Expected DC Voltage to TEM Gnd**
18	CAL_NTREQHE1P		0.9< V < 1.4 volts
19	CAL_NTREQHE1M		0.9< V < 1.4 volts
20	CAL_NDATA0_1P		0.9< V < 1.4 volts
21	CAL_NDATA0_1M		0.9< V < 1.4 volts
50	CAL_RIGHT_FIRST P		0 or 3.3V
28	CAL_NDATA1_1P		0.9< V < 1.4 volts
29	CAL_NDATA1_1M		0.9< V < 1.4 volts
30	CAL_NTREQLE2P		0.9< V < 1.4 volts
31	CAL_NTREQLE2M		0.9< V < 1.4 volts
32	CAL_NTREQHE2P		0.9< V < 1.4 volts
33	CAL_NTREQHE2M		0.9< V < 1.4 volts
56	CAL_THERM0P		2.2 < V < 2.8 volts
57	CAL_THERM0M		1.5 < V < 2.0 volts
34	CAL_NDATA0_2P		0.9< V < 1.4 volts
35	CAL_NDATA0_2M		0.9< V < 1.4 volts
36	CAL_NDATA1_2P		0.9< V < 1.4 volts
37	CAL_NDATA1_2M		0.9< V < 1.4 volts
38	CAL_NTREQLE3P		0.9< V < 1.4 volts
39	CAL_NTREQLE3M		0.9< V < 1.4 volts
40	CAL_NTREQHE3P		0.9< V < 1.4 volts
41	CAL_NTREQHE3M		0.9< V < 1.4 volts
42	CAL_NDATA0_3P		0.9< V < 1.4 volts
43	CAL_NDATA0_3M		0.9< V < 1.4 volts
44	CAL_NDATA1_3P		0.9< V < 1.4 volts
45	CAL_NDATA1_3M		0.9< V < 1.4 volts
62	CAL_THERM1P		2.2 < V < 2.8 volts
63	CAL_THERM1M		1.5 < V < 2.0 volts

Table 35. TEM Powered Measurements, Known-Good AFEE Board on TEM.

TEM Serial Number:		**Tem Connector:**	**Date:**	
Signal	**Measured DC Voltage to Corresponding Return with handheld voltmeter**	**Expected DC Voltage**	**Measured AC Voltage to Corresponding Return with handheld voltmeter**	**Expected AC Voltage, RMS**
3.3V ANALOG		3.2 < Meas < 3.5V		< 5 mV RMS
3.3V DIGITAL		3.2 < Meas < 3.5V		< 5 mV RMS
BIAS VOLTAGE		68 < Meas < 78V		< 5 mV RMS
RETURN ANALOG		< 5 mV	*Not Measured*	
RETURN DIGITAL		< 5 mV		
BIAS RET		< 5 mV		
CAL_RIGHT_FIRST M		< 5 mV		

Table 36. TEM Powered Measurements, Known Good AFEE Board Attached.

TEM Serial Number:		**Tem Connector:**	**Date:**
No.	**Signal**	**Measured DC Voltage to TEM Gnd**	**Expected DC Voltage to TEM Gnd**
2	CAL_NRESETP		0.9< V < 1.4 volts
3	CAL_NRESETM		0.9< V < 1.4 volts
4	CAL_NCMDP		0.9< V < 1.4 volts
5	CAL_NCMDM		0.9< V < 1.4 volts
6	CAL_CLKP		0.9< V < 1.4 volts
7	CAL_CLKM		0.9< V < 1.4 volts
8	CAL_NTREQLE0P		0.9< V < 1.4 volts
9	CAL_NTREQLE0M		0.9< V < 1.4 volts
10	CAL_NTREQHE0P		0.9< V < 1.4 volts
11	CAL_NTREQHE0M		0.9< V < 1.4 volts
12	CAL_NDATA0_0P		0.9< V < 1.4 volts
13	CAL_NDATA0_0M		0.9< V < 1.4 volts
14	CAL_NDATA1_0P		0.9< V < 1.4 volts
15	CAL_NDATA1_0M		0.9< V < 1.4 volts
16	CAL_NTREQLE1P		0.9< V < 1.4 volts
17	CAL_NTREQLE1M		0.9< V < 1.4 volts

TEM Serial Number:		Tem Connector:	Date:
No.	**Signal**	**Measured DC Voltage to TEM Gnd**	**Expected DC Voltage to TEM Gnd**
18	CAL_NTREQHE1P		0.9< V < 1.4 volts
19	CAL_NTREQHE1M		0.9< V < 1.4 volts
20	CAL_NDATA0_1P		0.9< V < 1.4 volts
21	CAL_NDATA0_1M		0.9< V < 1.4 volts
50	CAL_RIGHT_FIRST P		0 or 3.3V
28	CAL_NDATA1_1P		0.9< V < 1.4 volts
29	CAL_NDATA1_1M		0.9< V < 1.4 volts
30	CAL_NTREQLE2P		0.9< V < 1.4 volts
31	CAL_NTREQLE2M		0.9< V < 1.4 volts
32	CAL_NTREQHE2P		0.9< V < 1.4 volts
33	CAL_NTREQHE2M		0.9< V < 1.4 volts
56	CAL_THERM0P		2.2 < V < 2.8 volts
57	CAL_THERM0M		1.5 < V < 2.0 volts
34	CAL_NDATA0_2P		0.9< V < 1.4 volts
35	CAL_NDATA0_2M		0.9< V < 1.4 volts
36	CAL_NDATA1_2P		0.9< V < 1.4 volts
37	CAL_NDATA1_2M		0.9< V < 1.4 volts
38	CAL_NTREQLE3P		0.9< V < 1.4 volts
39	CAL_NTREQLE3M		0.9< V < 1.4 volts
40	CAL_NTREQHE3P		0.9< V < 1.4 volts
41	CAL_NTREQHE3M		0.9< V < 1.4 volts
42	CAL_NDATA0_3P		0.9< V < 1.4 volts
43	CAL_NDATA0_3M		0.9< V < 1.4 volts
44	CAL_NDATA1_3P		0.9< V < 1.4 volts
45	CAL_NDATA1_3M		0.9< V < 1.4 volts
62	CAL_THERM1P		2.2 < V < 2.8 volts
63	CAL_THERM1M		1.5 < V < 2.0 volts