GLAST Large Area Telescope
Calorimeter Subsystem

Vibration Test

Paul Dizon

Naval Research Lab
Washington DC

Vibration Test

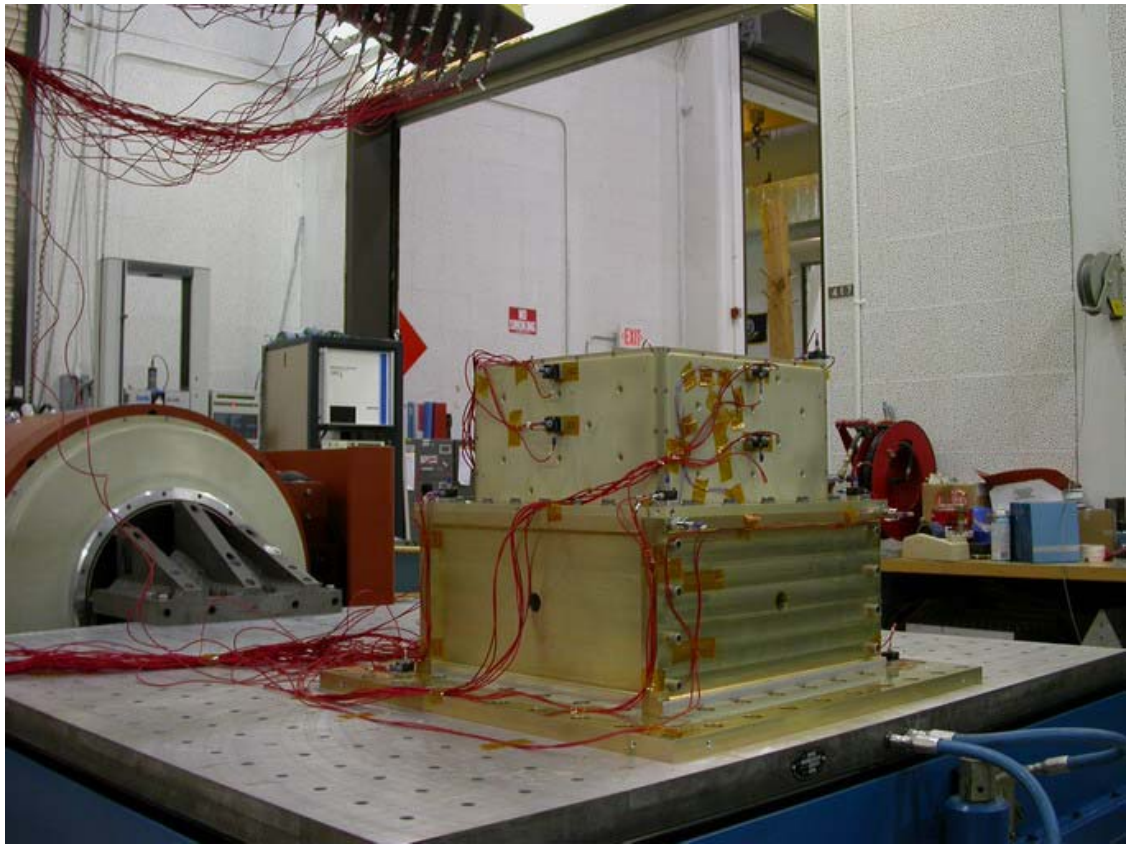

EM CAL on vibration slip table, NRL Vibration Lab

April 2003

Vibe Requirements and Traceability

- CAL module shall be capable of full operational performance after exposure to structural and vibration loads due to launch environment as specified in the *LAT Environmental Specification*, LAT-SS-00778

ENVIRONMENT	LAT-SS-00778	LEVELS TEST ARTICLE
Static-Equivalent Acceleration	Table 4, Section 8.1	Protoflight (QM)
Random Vibration	Table 21, Section 9.1	Protoflight (QM) Acceptance (FM)
Sinusoidal Vibration	Table 25, Section 9.2	Protoflight (QM) Acceptance (FM)

Vibe Pass-Fail Criteria

- **CAL module must meet the following criteria to successfully complete the vibration test requirements**
  - **Test levels are applied in accordance with:**
    - ***LAT Environmental Specification*, LAT-SS-00778, Sections 8.1, 9.1, and 9.2**
    - ***CAL Flight Module Vibration Test Procedure*, LAT-PS-04454, Section 6.1 through 6.4**
  - **No damage is incurred by the CAL Module**
    - **Pre- and Post-Frequency Response Functions Indicate No Significant Changes in Dynamic Response**
    - **Visual Inspections Show No Physical Damage**
  - **Data is acquired and archived**
  - **Successful post-test CAL functional testing and cosmic muon collection in accordance with *CAL Comprehensive and Limited Performance Test Definition*, LAT-MD-01370**

Vibe Testing to Date

- Development Testing
  - Developmental model CAL modules successfully tested to beyond qualification levels
    - LM2 and VM2 Test Report, LAT-TD-00950-02
  - Engineering Model CAL module successfully tested to qualification levels
    - Procedure: LAT-PS-01346-03
    - Report: LAT-TD-01888-01
- Component Testing
  - Each composite structure is qualified by sine-burst
    - Procedure: GLAST-LLR-PR-079

Vibe Test Configuration

- The test specimen shall consist of the following as documented in the as-built configuration list:
  - CAL Tower Module (LAT-DS-04536)
  - SIU Mass Simulator (LAT-DS-01951)
- Deviations from the Flight Configuration
  - EM2 TEM-TPS Assembly used in place of the flight unit
- Responses will be limited to prevent them from exceeding responses observed during EM test
  - Control Response Accelerometer locations are identified in Test Procedure, LAT-PS-04454

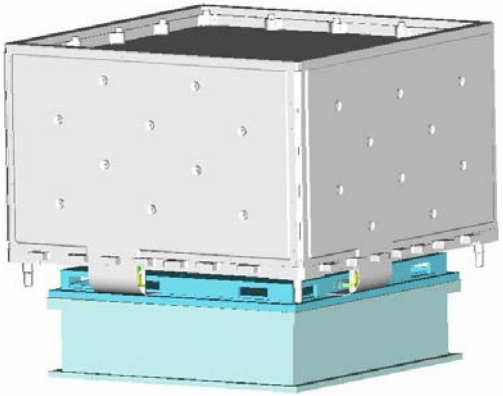

CAL Tower Module

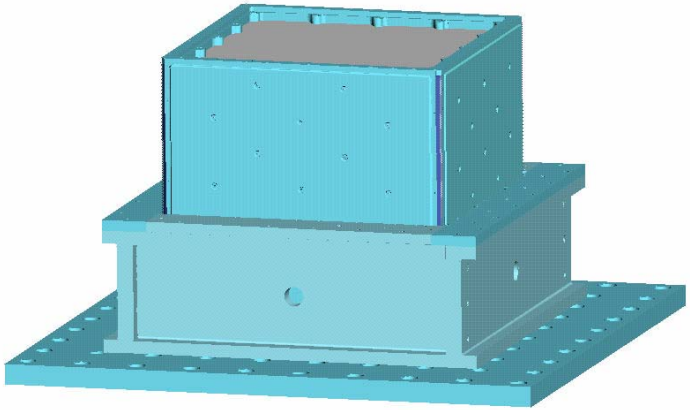

CAL Tower Module in Test Fixture

Vibe Test Flow

❑ Protoflight Test Flow (QM)

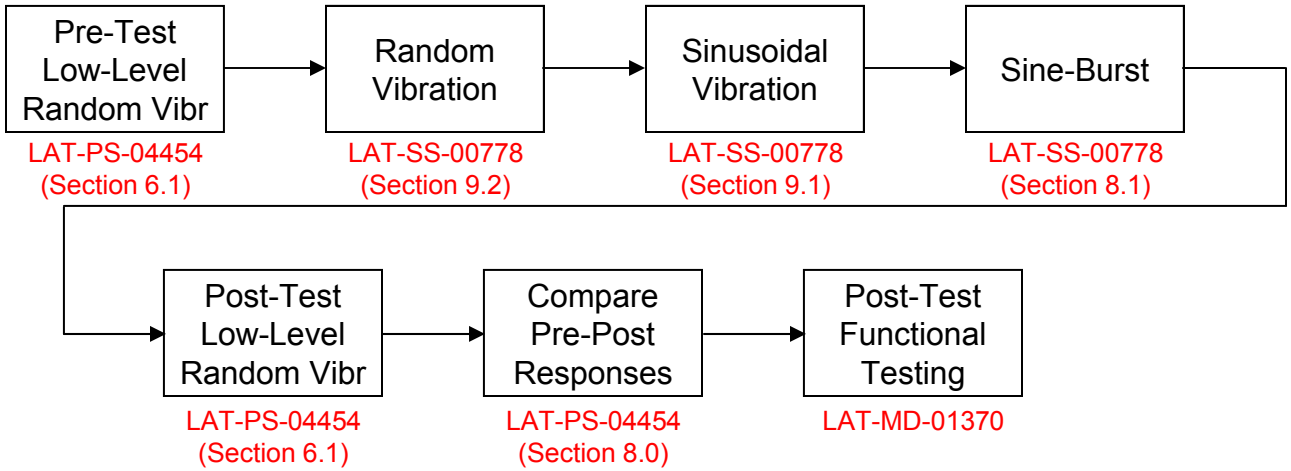

❑ Acceptance Test Flow (FM)

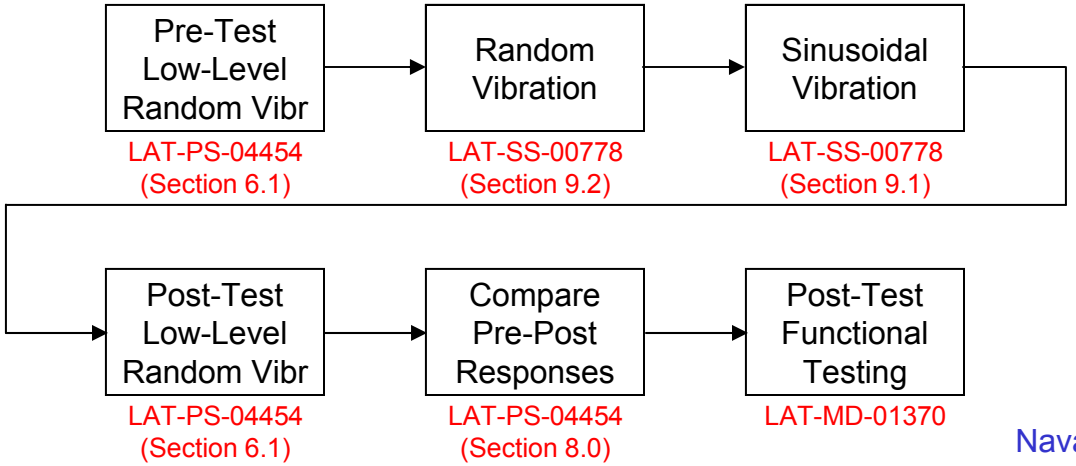

Vibe Facility Status

- Facility is ready
- Accelerometers available
- Vibration slip table and vertical shaker available
- Test fixture undergoing interface modification
- No current schedule conflicts

Vibe Known Risks and Limitations

- None

Vibe Status

ITEM	STATUS
Requirements	Defined
Pass-Fail Criteria	Defined
Testing to Date	Successful, No Open Items
Configuration	Defined
Handling/Installation	Defined
Facility Status	Ready
Test Equipment	Ready
Risks and Limitations	Addressed
Procedure	Configured
Status	On Schedule