NOTES: UNLESS OTHERWISE SPECIFIED

1. CAUTION: ELECTROSTATIC SENSITIVE DEVICES ARE USED IN ASSEMBLY.
2. ASSEMBLE BOND SET-UP AS SHOWN IN C0501 IAW SAI-PROC-1229.
3. TIGHTEN SHOULDER BOLTS (ITEM 13), 4 PLACES, UNTIL THEY BOTTOM-OUT ON SUPPORT (ITEM 1).
4. INSTALL THUMBSCREW (ITEM 15) THROUGH SUPPORT (ITEM 1) 8 PLACES AS SHOWN. USE ADHESIVE (ITEM 11) TO BOND SWIVEL PAD (ITEM 3) TO SWIVEL PAD OF THUMBSCREW (ITEM 15). MIX ADHESIVE PER MANUFACTURER'S INSTRUCTIONS. REMOVE EXCESS ADHESIVE. CURE ASSEMBLY IAW MANUFACTURER'S INSTRUCTIONS.
5. CAUTION: THUMBSCREWS WITH SWIVEL PADS ARE USED TO POSITION CsI CRYSTAL ONLY.
   HAND TIGHTEN THUMBSCREWS, TO ITEM 1, ONLY UNTIL FLAT SURFACE OF DELRIN SWIVEL PADS LIGHTLY RESTRAINS CsI CRYSTAL.
   DO NOT OVER TIGHTEN ELSE CRYSTAL WILL BE DAMAGED.
6. ORIGINAL SOURCE OF SUPPLY:
   McMASTER-CARR
   P.O. Box 740100
   Atlanta, GA 30374-0100
7. ORIGINAL SOURCE OF SUPPLY:
   ASSOCIATED SPRING RAYMOND BARNES GROUP INC
   18 MAIN ST
   BRISTOL, CT 06010
8. ORIGINAL SOURCE OF SUPPLY:
   CNRS/I N.2 P.3
   LABORATOIRE LEPRINCE RINGUET
   F91128 PALAISEAU FRANCE
   TEL: 0169333188
9. ORIGINAL SOURCE OF SUPPLY:
   DEXTER CORPORATION
   HYSOL FREKOTE PRODUCTS
   ONE DEXTER DRIVE
   SEABROOK, NH 03874-4018
10. HARDWARE MAY BE SUBSTITUTED WITH LIKE HARDWARE, AFTER APPROVAL FROM THE COGNIZANT MANUFACTURING ENGINEER.

Released
MASTER DRAWING
REVISION BY
EO ONLY WHEN
RELEASED
SWALES FILE COPY
29-Aug-03

REVISION				
SYM	ZONE	DESCRIPTION	DATE	APPROVAL

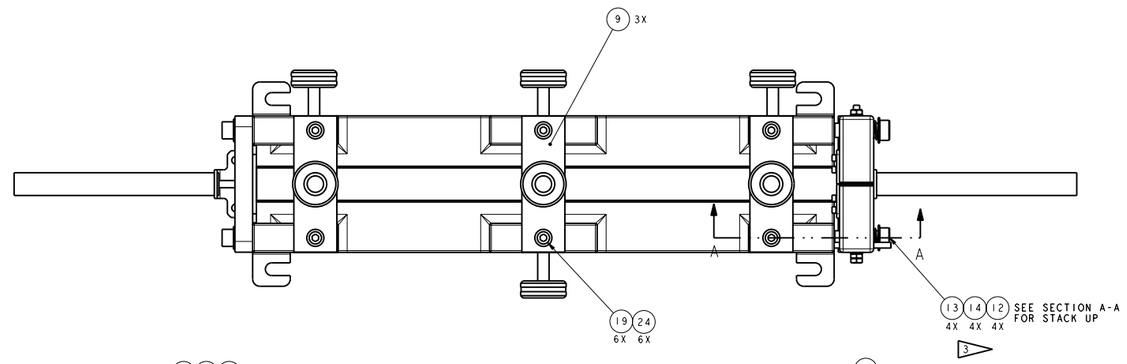

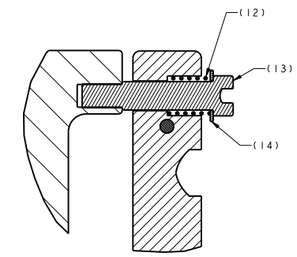

SECTION A-A
SCALE 2/1

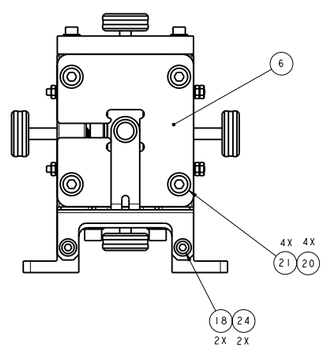

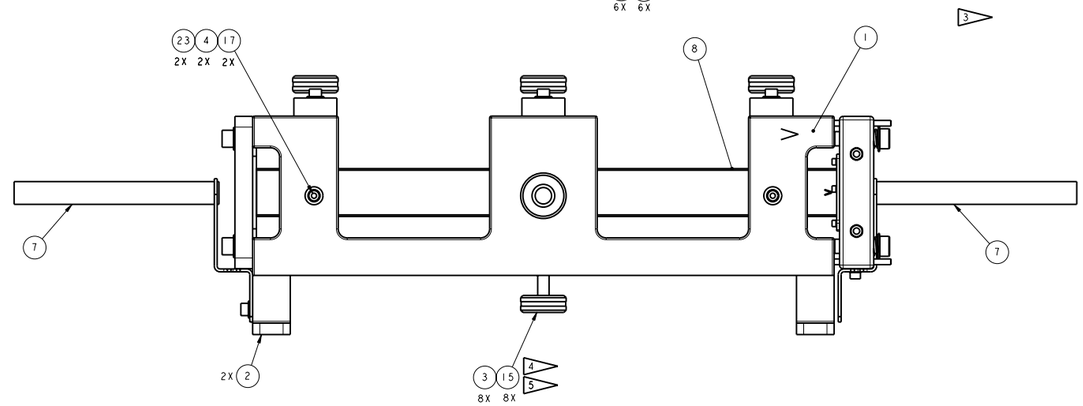

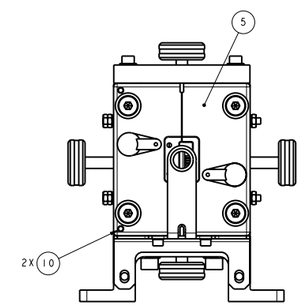

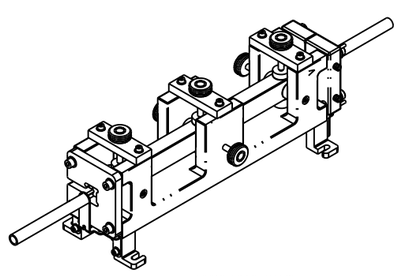

ISOMETRIC VIEW
FOR REFERENCE ONLY
SCALE 1/2

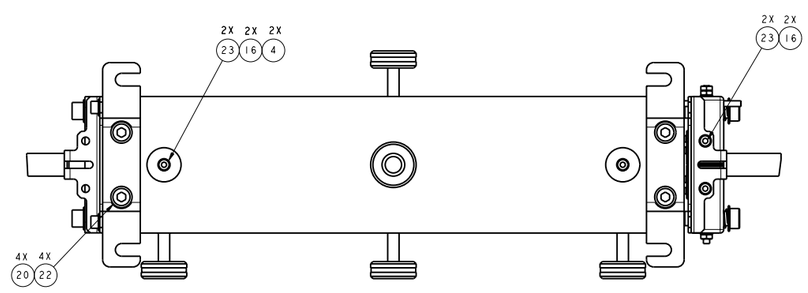

REQD	REQD	NO	ITEM	PART NO.	DESCRIPTION	MATERIAL SPEC
		8	24	NAS1149CN832R	WASHER, FLAT .164 DIA	
		6	23	NAS620C6L	WASHER, FLAT #6	
		4	22	NAS620C416L	WASHER, FLAT 1/4	
		4	21	NAS1149CN432R	WASHER, FLAT .250 DIA	
		8	20	NAS1352-4-12	SCREW,CAP,SCH .250-20UNRC X .750 LG	ALY STL
		6	19	NAS1352-08-12	SCREW,CAP,SCH .164-32UNRC X .750 LG	ALY STL
		2	18	NAS1352-08-4	SCREW,CAP,SCH .164-32UNRC X .250 LG	ALY STL
		2	17	NAS1352C06-12	SCREW,CAP,SCH .138-32UNRC X .750 LG	CRES
		4	16	NAS1352C06-10	SCREW,CAP,SCH .138-32UNRC X .625 LG	CRES
		8	15	9020B24300	THUMBSCREW W/SWIVEL PAD 1/4-20X1.5	
		4	14	NAS1149CN0532R	WASHER, FLAT .312 DIA	
		4	13	90298A583	SHOULDER SCREW, .312" DIA X 1.00" LG, 1/4-20 THRD	
		4	12	C0420-035-0750	SPRING, COMPRESSION ,420 DIA x.750 LG	
		AR	11	EA9394 A/B	ADHESIVE PASTE EA9394	
		2	10	97395A454	PIN, DOWEL .125 DIA x 1.50 LG	
		3	9	C0505	RETAINER BOND FIXTURE	ASTM B221
		1	8	LAT-DS-01115-01	CsI CRYSTAL, CAL CDE	
		2	7	C0540	ASSEMBLY DIODE LEAD HOLDER	
		1	6	C0516	BACK STOP CRYSTAL	
		1	5	C0511	ASSEMBLY MOLD/PDA	
		4	4	C0519-3	PAD SWIVEL/FIXED	
		8	3	C0519-1	PAD SWIVEL/FIXED	
		2	2	C0504	LEG BOND FIXTURE	
		1	1	C0502	SUPPORT, CRYSTAL FLIGHT TOOLING	ASTM B209, B211
				C0501	ASSY, FIXTURE FLIGHT MODEL	

LIST OF MATERIAL

	NAME	INIT	DATE
DESIGNER	M. JOHNSON	MJ	8/27/03
DRAWN BY	M. JOHNSON	MJ	8/27/03
CHECKED	B. VYAS	BV	8/27/03
APPROVED-STRESS			
APPROVED-QA	J. LEE	JL	8/27/03
APPROVED-ENGINEER	T. LEE	TL	8/27/03
APPROVED	M. KENNEDY	MK	8/27/03
APPROVED	J. HAGGERTY	JH	8/27/03

UNLESS OTHERWISE SPECIFIED: ALL DIMENSION ARE IN MILLIMETERS AND APPLY AFTER FINISH
DIMENSION TOLERANCES
0.X ±0.1 ANGLE±0.5°
0.XX ±0.05
0.XXX ±0.025
0.XXXX ±0.0125
FINISH IN MICROMETERS
INTERPRET DRAWING PER ANSI Y14.5M-1982
REMOVE ALL BURRS AND SHARP EDGES NO.25 OR CHAMFER MAX
MODEL NAME: C0501 -:2
DRW VERSION: -:1
PROENGINEER VERSION:2001

SWALES AEROSPACE
5050 POWDER MILL ROAD
BELTSVILLE, MD 20705

TITLE
ASSY, FIXTURE, FLIGHT MODEL CDE, GLAST

E
C0501
REV -
CAGE CODE 8V543
SCALE: 1/1
WT APPROX:
SHEET 1 OF 1

METRIC
HYBRID METRIC/INCH
N/A
CDE FT
NEXT ASSY
USED ON
CM CLASSIFICATION A
THIRD ANGLE PROJECTION
TASK NO: 00006.036

DRAWN R. MENCIA RM 8/28/03