REVISION				
SYM	ZONE	DESCRIPTION	DATE	APPROVAL

NOTES: UNLESS OTHERWISE SPECIFIED

1. THIS DRAWING TO BE USED IN CONJUNCTION WITH LAT-SS-02235, FLIGHT MODEL CDE ACCEPTANCE TEST PLAN.
2. SERIAL NUMBER TO BE MARKED IN APPROXIMATE LOCATION SHOWN, PRIOR TO APPLICATION OF SEAM TAPE.
3. KAPTON TAPE USED TO SECURE ENDCAPS SHALL BE 3/8 INCH WIDTH. TAPE USED FOR VM2000 WRAPPING SHALL BE 1/2 INCH WIDTH AND COVER VM2000 WRAPPER OVERLAP.
4. BOND PDA TO CRYSTAL IAW SAI-PROC-1229.
5. WRAP AND INSTALL END CAP IAW SAI-PROC-1234.
   - -SEAM TAPE COVERS SEAM AND DOES NOT COVER END CAPS
   - -WRAP OVERLAPS SEAM
   - -WRAP MUST BE TIGHT AROUND CRYSTAL
   - -TAPE SECURING END CAP DOES NOT OVERLAP ENDCAP CHAMFERS

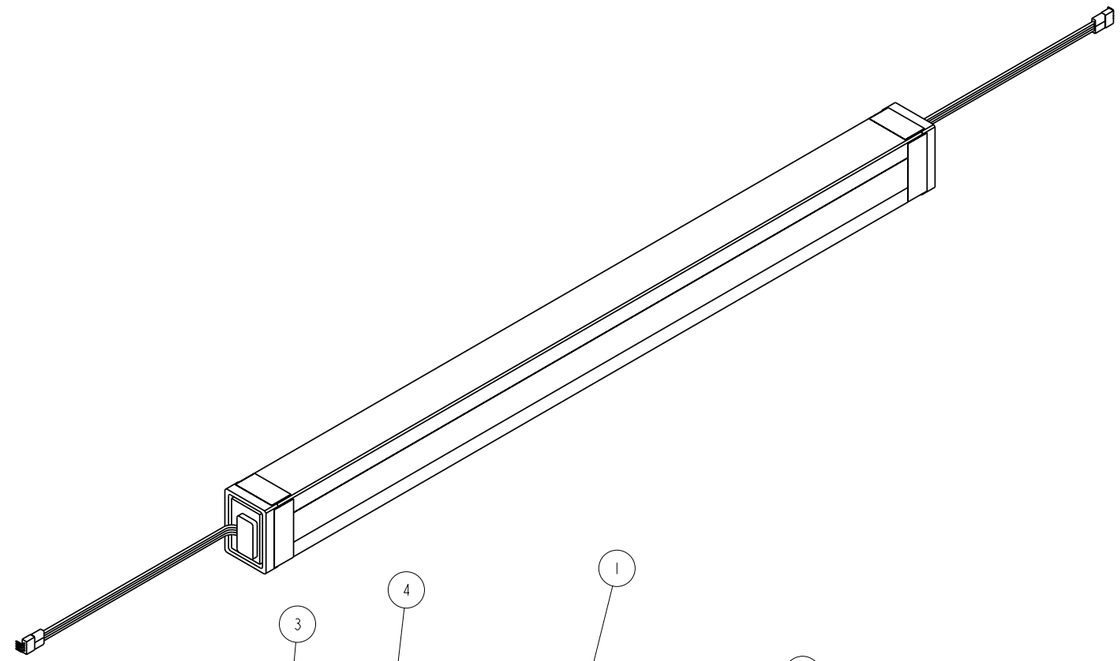

REQD	REQD	ITEM NO	PART NO.	DESCRIPTION	MATERIAL SPEC
	2	8	LAT-DS-01160	END CAP	
	AR	7	DC 92-023	PRIMER	
	AR	6	DC 93-500	ADHESIVE	
	AR	5	K102-.375	KAPTON TAPE, 3/8" WIDE	
	AR	4	K102-.500	KAPTON TAPE, 1/2" WIDE	
	AR	3	LAT-DS-02159	WRAPPER, CRYSTAL	
	2	2	LAT-DS-02435	PDA	
	1	1	LAT-DS-01115	CRYSTAL	
	AR	X	——	CRYSTAL DETECTOR ELEMENT	

LIST OF MATERIAL

NAME	INIT	DATE
DESIGNER ---		
DRAWN BY K. Wolko		
CHECKED P. Dizon		
APPROVED-STRESS		
APPROVED-QA J. Lee		
APPROVED-ENGINEER P. Dizon		
APPROVED B. Raynor		
APPROVED -		

UNLESS OTHERWISE SPECIFIED: ALL DIMENSION ARE IN MILLIMETERS AND APPLY AFTER FINISH DIMENSION TOLERANCES

0.X ±0.1 ANGLE±0.5°
X ±0.15
XX ±0.3
XXX ±0.8
XXXX ±1.5
FINISH IN MICROMETERS

INTERPRET DRAWING PER ANSI Y14.5M-1982
REMOVE ALL BURRS AND SHARP EDGES R0.25 OR CHAMFER MAX

MODEL NAME: NEW_GLAST_CRYSTAL_DIODE_ASSY_1
DRW VERSION:
PROVENGINEER VERSION:2001

GLAST
SPACE SCIENCES DIVISION
NAVAL RESEARCH LABORATORY
WASHINGTON, DC

TITLE
CRYSTAL DETECTOR ELEMENT, CALORIMETER GLAST

D LAT-DS-01900 REV 02

CAGE CODE 8V543 SCALE: 1.000 WT APPROX: - SH 1 OF 2

METRIC
HYBRID METRIC/INCH
THIRD ANGLE PROJECTION

CM CLASSIFICATION A

NEXT ASSY | USED ON GLAST

TASK NO: ###

REVISION				
SYM	ZONE	DESCRIPTION	DATE	APPROVAL

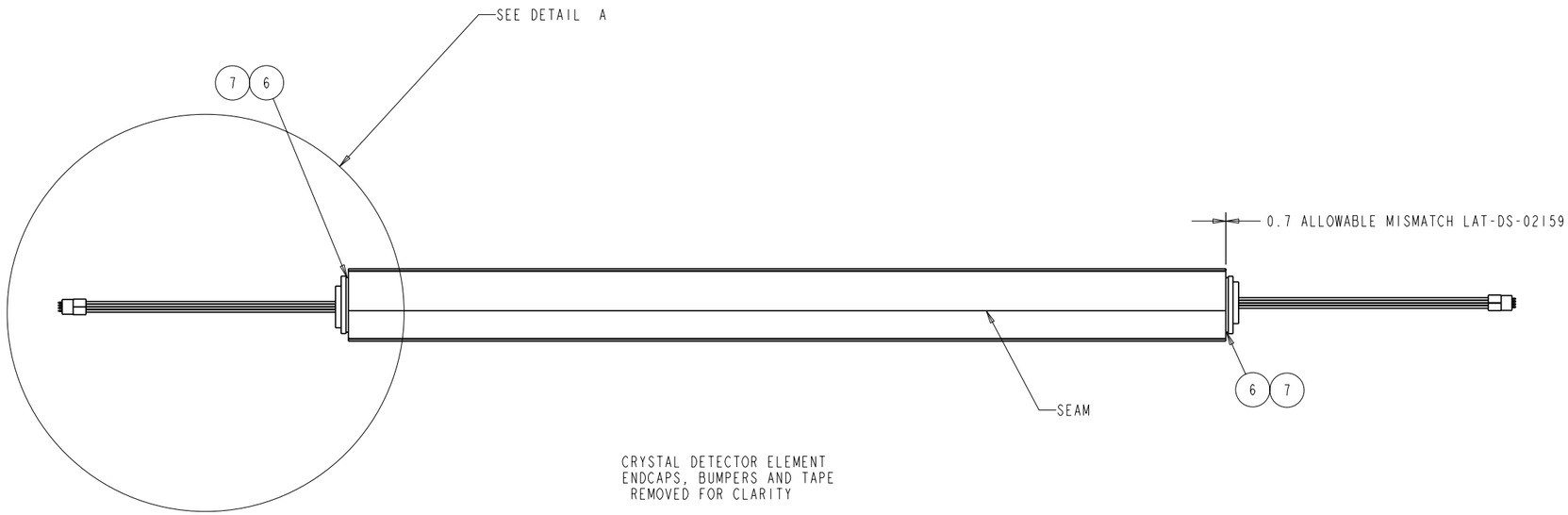

CRYSTAL DETECTOR ELEMENT
ENDCAPS, BUMPERS AND TAPE
REMOVED FOR CLARITY

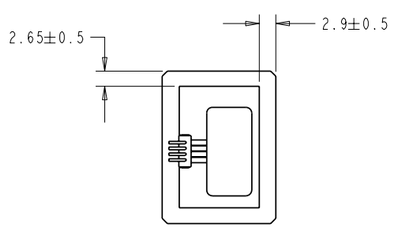

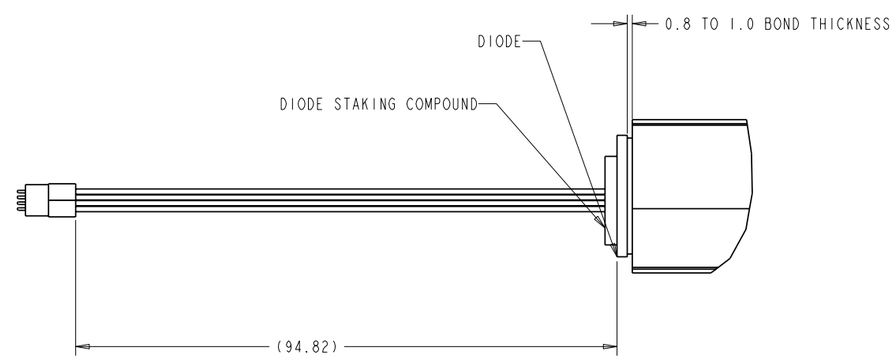

DETAIL A
SCALE 2.000

NAME	INIT	DATE	CAGE CODE	LAT-DS-01900	REV 02
CHECKED P. Dizon			8V543	SCALE 1.000 / WT - / SH 2 OF 2	
APPROVED-ENGR P. Dizon			FILE NAME: LAT-DS-01900 .	MODEL NAME: NEW_GLAST_CRYSTAL_DIODE_ASSY -.1*	