| REVISION | | | | |
|---|---|---|---|---|
| SYM | ZONE | DESCRIPTION | DATE | APPROVAL |
| | | | | |

NOTES: UNLESS OTHERWISE SPECIFIED

1. MATERIAL: ALUMINUM ALLOY, 6061-T6
2. PRESS FIT PIN (ITEM 3), USING AN INTERFERENCE FIT OF .0003-.0008 INCHES.
3. MAY BE SUBSTITUTED WITH LIKE HARDWARE AFTER APPROVAL FROM COGNIZANT MANUFACTURING ENGINEER.

Released
MASTER DRAWING
REVISION BY
EO ONLY WHEN
RELEASED
SWALES FILE COPY
03-Oct-03

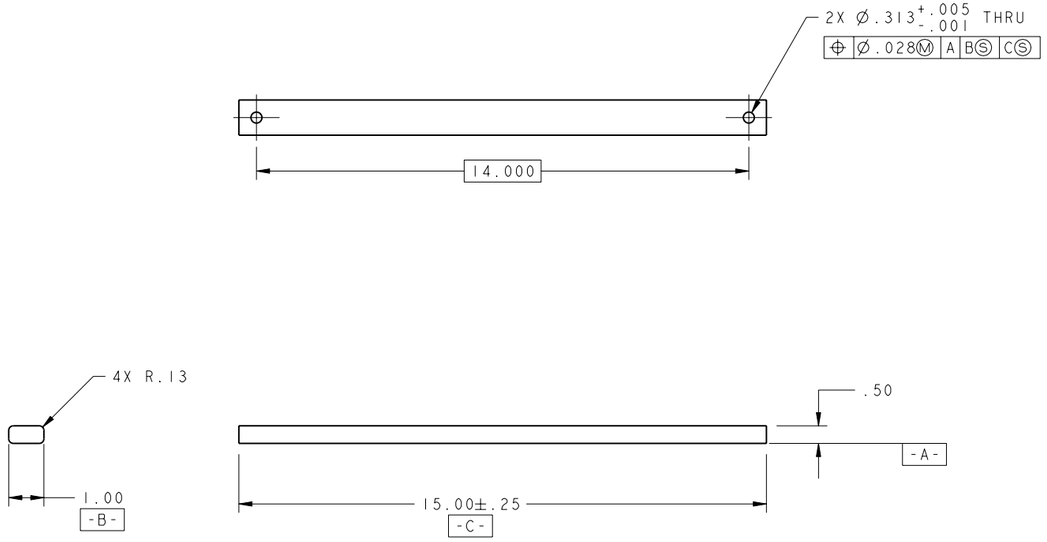


C0554-3 (ITEM 2)
SCALE : 1/2

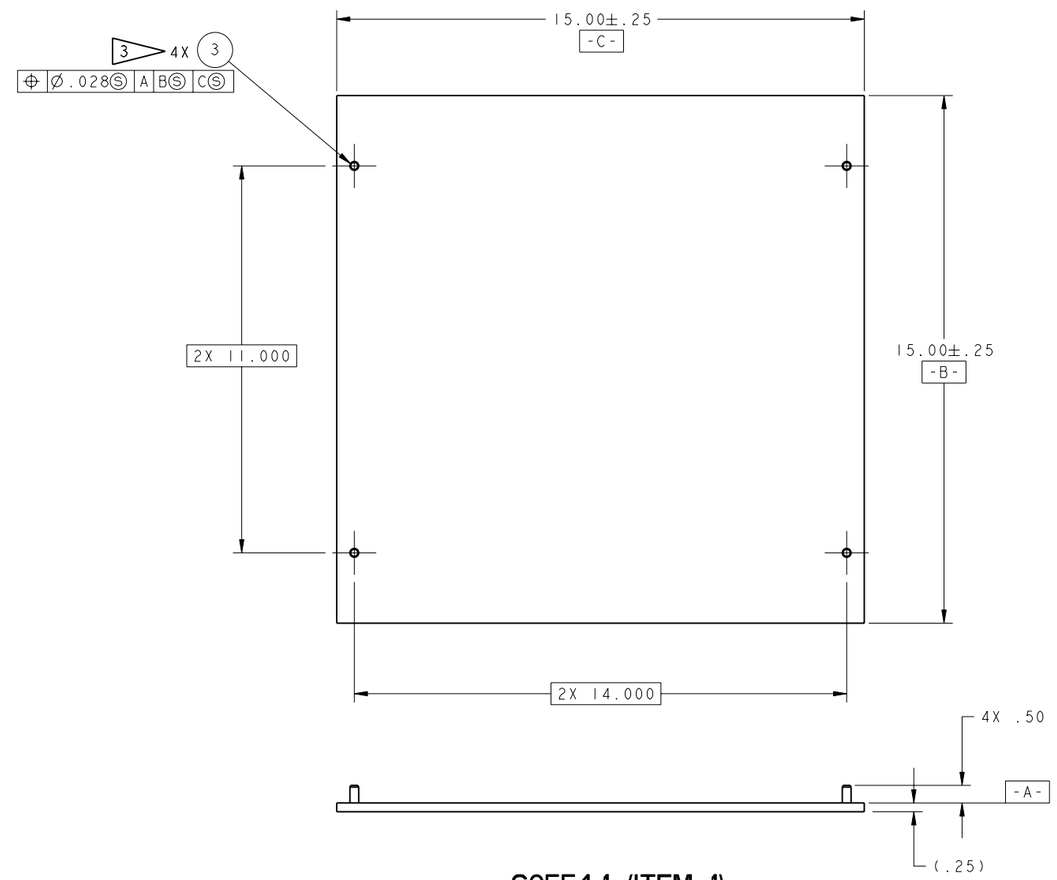


C0554-1 (ITEM 1)
SCALE : 1/2

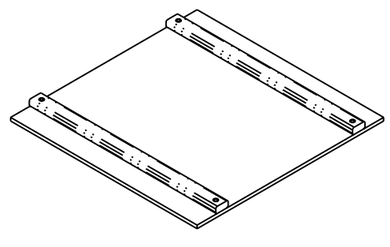

ASSEMBLY ISOMETRIC VIEW
FOR REFERENCE ONLY
SCALE 1/4

| REQD | REQD | ITEM NO | PART NO. | DESCRIPTION | MATERIAL SPEC |
|---|---|---|---|---|---|
| 3 | 4 | 3 | MS16555-646 | PIN,, .250 DIA X .750 LG | |
| | 2 | 2 | C0554-3 | HOLD DOWN, PDA BAKE-OUT TRAY | 1 |
| | 1 | 1 | C0554-1 | BASE, PDA BAKE-OUT TRAY | 1 |
| | X | — | C0554 | ASSEMBLY, PDA BAKE-OUT TRAY | — |

LIST OF MATERIAL

| | NAME | INIT | DATE |
|---|---|---|---|
| DESIGNER | M. JOHNSON | MJ | 10/1/03 |
| DRAWN BY | M. JOHNSON | MJ | 10/1/03 |
| CHECKED | - | | |
| APPROVED-STRESS | - | | |
| APPROVED-QA | - | | |
| APPROVED-ENGINEER | J. HAGGERTY | JH | 10/3/03 |
| APPROVED | M. KENNEDY | MJK | 10/1/03 |
| APPROVED | R. MENCIA | RM | 10/2/03 |

UNLESS OTHERWISE SPECIFIED:
ALL DIMENSION ARE IN INCHES AND APPLY AFTER FINISH
DIMENSION TOLERANCES
.XX: ±0.03
.XXX: ±0.010
ANGLE: ±0.5°
FRACTIONS: ±1/16

125

INTERPRET DRAWING PER ANSI Y14.5M-1982
REMOVE ALL BURRS AND SHARP EDGES R.010 OR CHAMFER MAX

MODEL NAME: C0554 -.0
DRW VERSION: -.3
PRO/ENGINEER VERSION:2001

METRIC
HYBRID METRIC/INCH

CM CLASSIFICATION: D

THIRD ANGLE PROJECTION

N/A | CDE FT
NEXT ASSY | USED ON
TASK NO: 00006.036

SWALES AEROSPACE
5050 POWDER MILL ROAD
BELTSVILLE, MD 20705

TITLE
ASSEMBLY,
PDA BAKE-OUT TRAY
CDE BONDING

D | C0554 | REV -

CAGE CODE 8V543 | SCALE: 1/2 | WT APPROX: - | SH 1 OF 1