LAT PROJECT DOCUMENT CHANGE NOTICE (DCN)

DCN No. LAT-XR-02089-01

SHEET 1 **OF** 1

ORIGINATOR: Martin Nordby	**PHONE:** 650-926-3415	**DATE:** 5/2/03
CHANGE TITLE: DCN for LAT Mechanical Systems Interface Definition Dwg CAL-LAT Interface		**ORG.:**

DOCUMENT NUMBER	TITLE	NEW REV.
LAT-TD-00233	LAT Mechanical Systems Interface Definition Dwg CAL-LAT Interface	06

CHANGE DESCRIPTION (FROM/TO):
Initial release

REASON FOR CHANGE:

ACTION TAKEN: ☒ **Change(s) included in new release** ☐ **DCN attached to document(s), changes to be included in next revision**
☐ **Other (specify):**

DISPOSITION OF HARDWARE (IDENTIFY SERIAL NUMBERS):	DCN DISTRIBUTION:
☒ **No hardware affected (record change only)**	
☐ **List S/Ns which comply already:**	
☐ **List S/Ns to be reworked or scrapped:**	
☐ **List S/Ns to be built with this change:**	
☐ **List S/Ns to be retested per this change:**	
☐	

SAFETY, COST, SCHEDULE, REQUIREMENTS IMPACT? ☐ **YES** ☒ **NO**
If yes, CCB approval is required. Enter change request number:

APPROVALS	DATE	OTHER APPROVALS (specify):	DATE
ORIGINATOR: Martin Nordby (signature on file)	5/2/03	Mechanical- Marc Campell (signature on file)	5/6/03
ORG. MANAGER: L. Klaisner (signature on file)	5/2/03		
System Engineering- D. Horn (signature on file)	5/2/03		
CAL- Neil Johnson (signature on file)	5/2/03		
Chief Electrical- Gunther Haller (signature on file)	5/6/03		
DCC RELEASE: Natalie Cramar (signature on file)	5/6/03	Doc. Control Level: ☒ Subsystem ☐ LAT IPO ☐ GLAST Project	

REV	DESCRIPTION	DWN	CHKR	APVD	DATE
6	LAT-DS-00233				

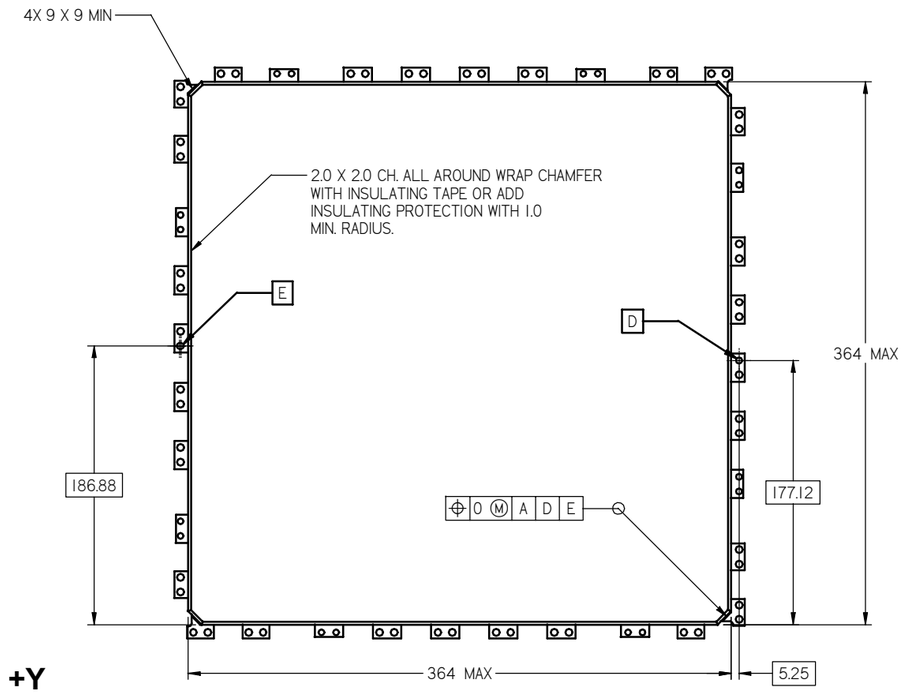

TOP VIEW
CAL STAY CLEAR ONLY

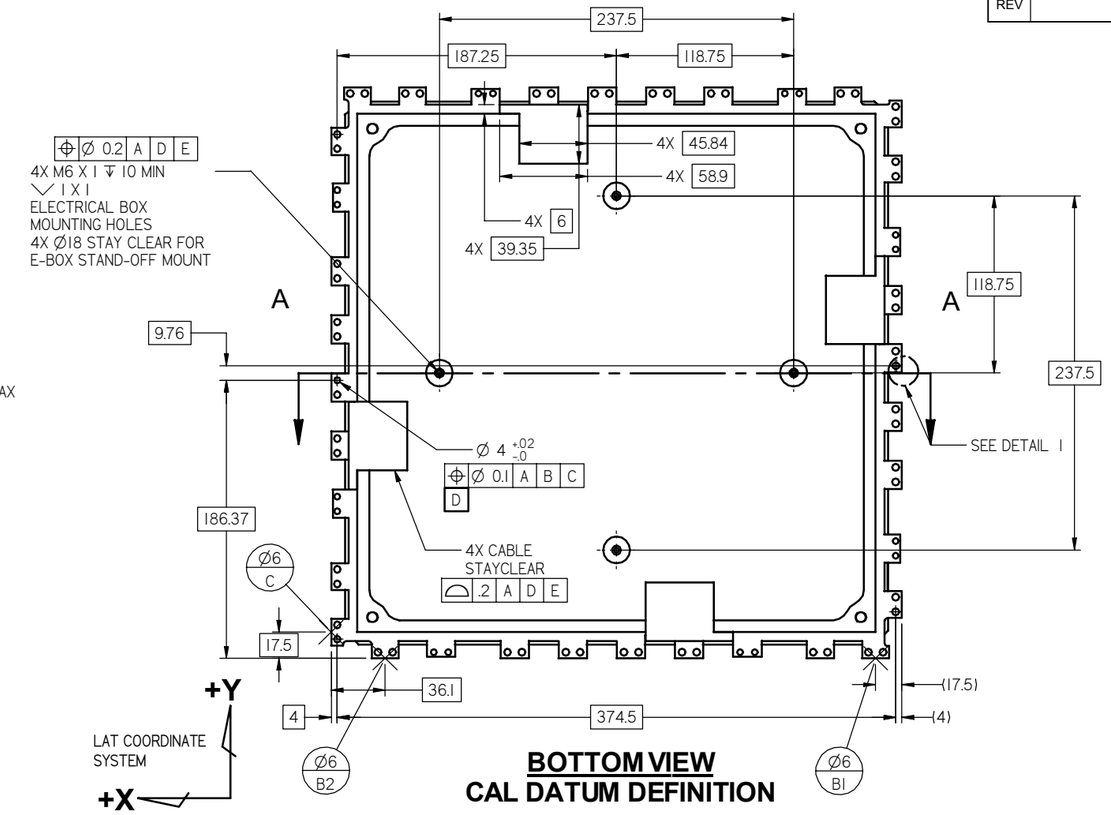

BOTTOM VIEW
CAL DATUM DEFINITION

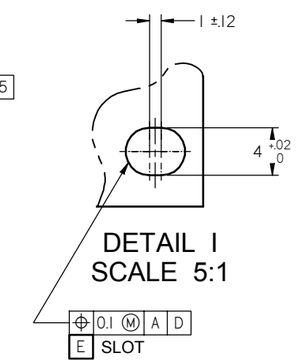

DETAIL 1
SCALE 5:1

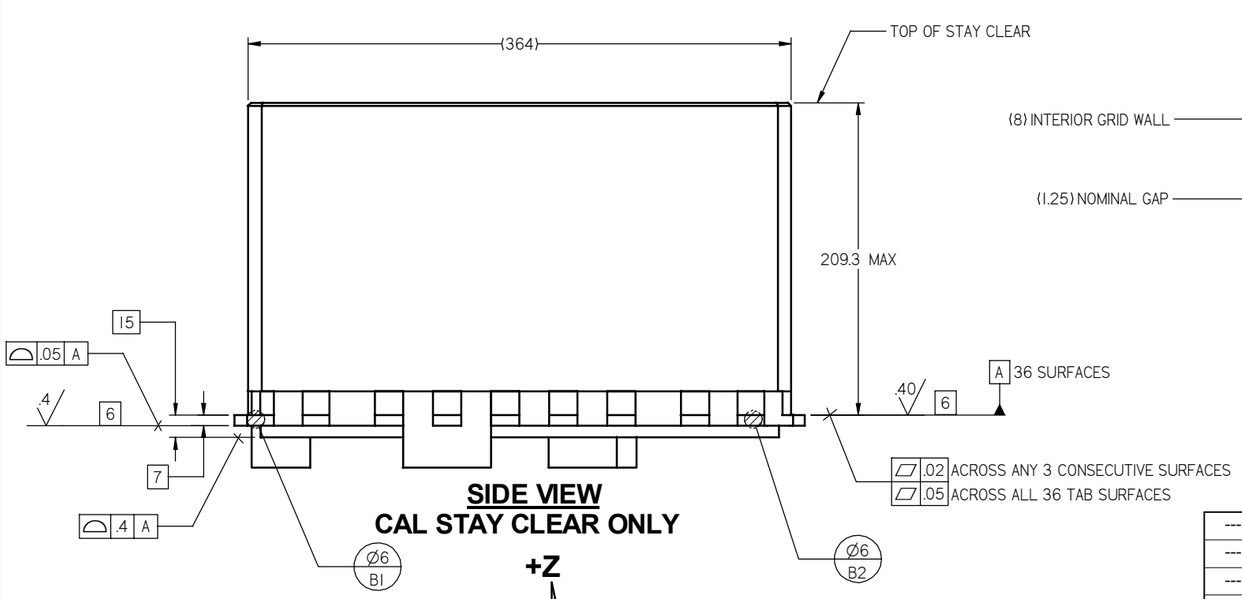

SIDE VIEW
CAL STAY CLEAR ONLY

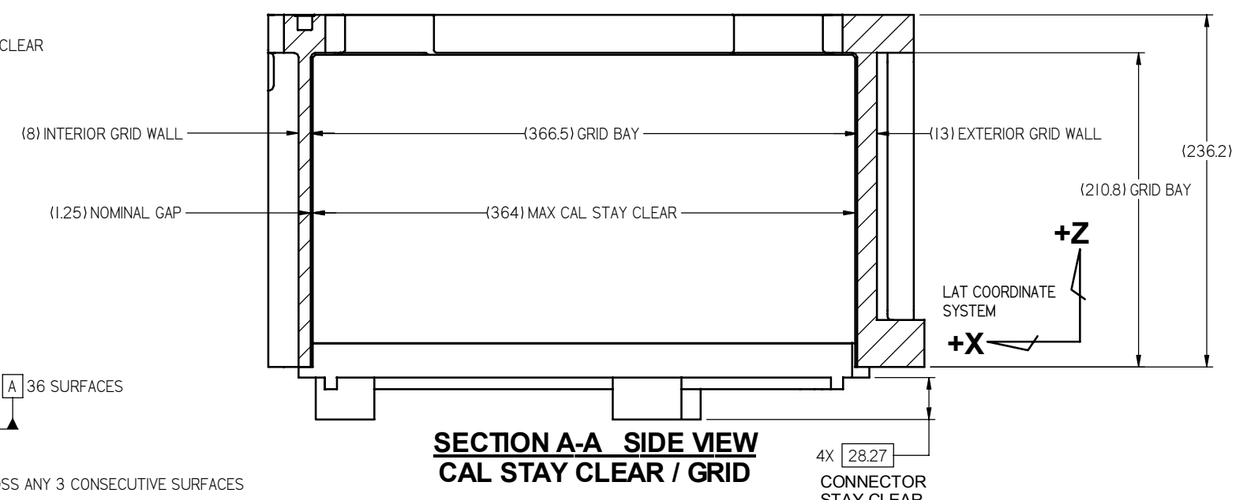

SECTION A-A SIDE VIEW
CAL STAY CLEAR / GRID

NEXT ASSEMBLIES:

DIMENSIONING AND TOLERANCING IS IN ACCORDANCE WITH ASME Y14.5M-1994.

UNLESS OTHERWISE SPECIFIED
DIMENSIONS ARE IN MM.
TOLERANCES:
BREAK EDGES .2-.5
INTERNAL CORNERS R.4 MAX
FRACTIONS ± ---
DEC .XX ± .2
.XXX ± ---
.XXXX ± ---
ANGLE ± ---
ALL SURF ---

SCALE: 1:2 | DO NOT SCALE DRAWING | CAD FILE NAME: LAT-DS-00233-6.dft

STANFORD LINEAR ACCELERATOR CENTER
U.S. DEPARTMENT OF ENERGY
STANFORD UNIVERSITY STANFORD, CALIFORNIA

PROPRIETARY DATA OF STANFORD UNIVERSITY AND/OR U. S. DEPARTMENT OF ENERGY. RECIPIENT SHALL NOT PUBLISH THE INFORMATION WITHIN UNLESS GRANTED SPECIFIC PERMISSION OF STANFORD UNIVERSITY.

		DATE
ENGR	MARTIN NORDBY	
DWN	R MEYER	04-01-03
CHKR	MARTIN NORDBY	

APPROVALS:
MARTIN NORDBY
NEIL JOHNSON
GUNTHER HALLER
MARC CAMPELL

LAT MECHANICAL SYSTEMS INTERFACE DEFINITION DWG CAL - LAT INTERFACE

DRAWING NUMBER: LAT-DS-00233
REVISION NUMBER: 6
D
SH 1 OF 4

LAT MECH SYS CAL LAT INTFC DEF

LLAC FORMAT V2.0

REV	DESCRIPTION	DWN	CHKR	APVD	DATE

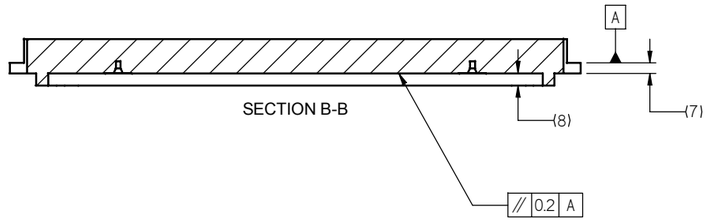

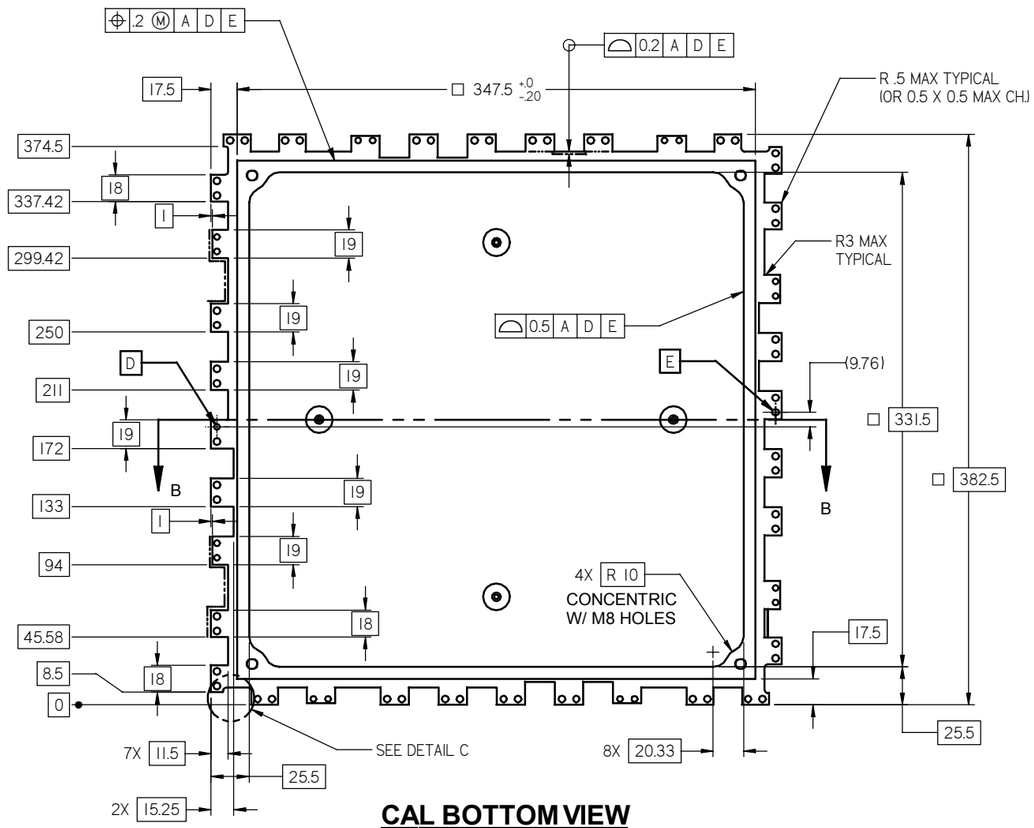

CAL BOTTOM VIEW
CAL BOTTOM PLATE TAB DEFINITION

NOTE: ROTATE PATTERN AT 90°. ROTATIONALLY SYMMETRIC ON ALL 4 SIDES

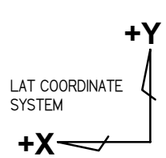

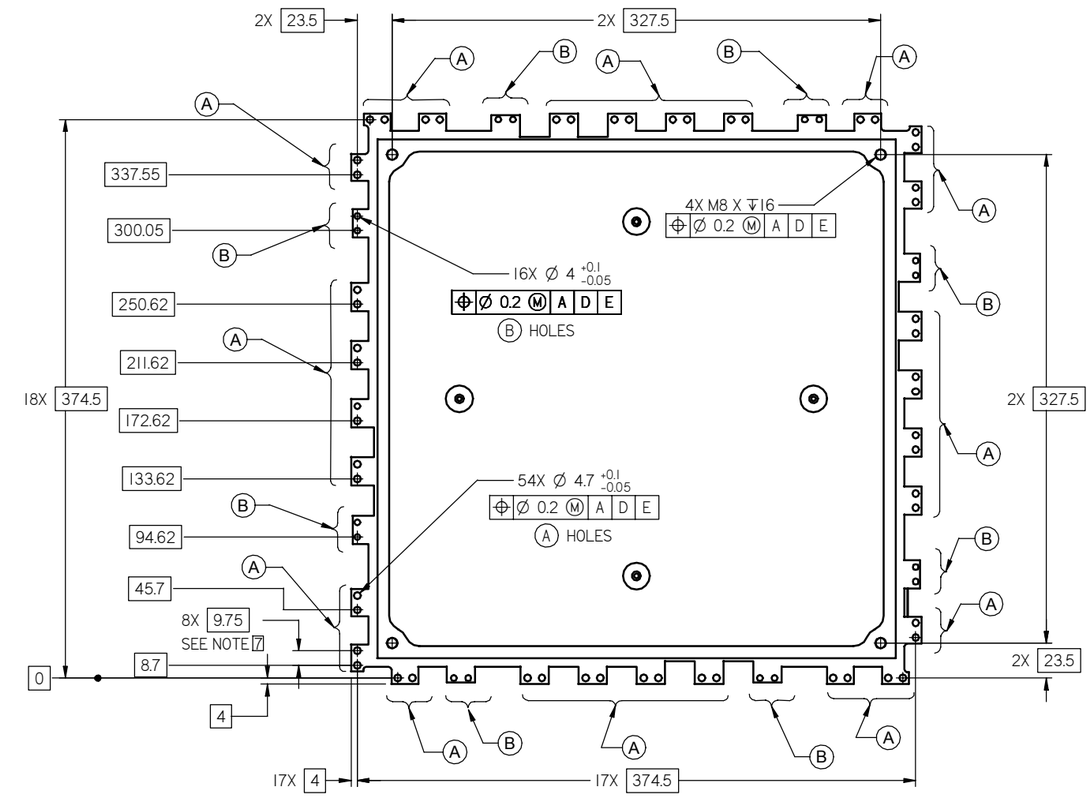

CAL BOTTOM VIEW
CAL MOUNTING HOLE DEFINITION

NOTE: ROTATE PATTERN AT 90°. ROTATIONALLY SYMMETRIC ON ALL 4 SIDES

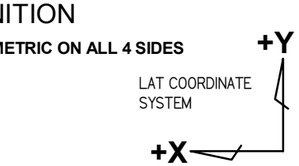

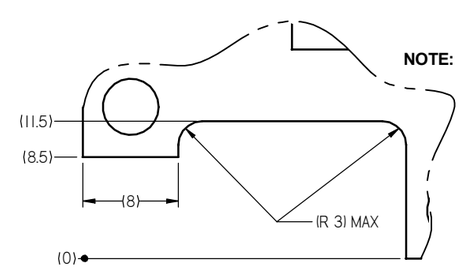

4X DETAIL C
SCALE 5:1

---	DIMENSIONING AND TOLERANCING IS IN ACCORDANCE WITH ASME Y14.5M-1994.	SCALE: 1:2	DO NOT SCALE DRAWING	CAD FILE NAME: LAT-DS-00233-6.dft
---	UNLESS OTHERWISE SPECIFIED DIMENSIONS ARE IN MM. TOLERANCES: BREAK EDGES .2-.5 INTERNAL CORNERS R.4 MAX FRACTIONS ± --- DEC .XX ± .2 .XXX ± --- .XXXX ± --- ANGLE ± --- ALL SURF ---	STANFORD LINEAR ACCELERATOR CENTER U.S. DEPARTMENT OF ENERGY STANFORD UNIVERSITY STANFORD, CALIFORNIA	LAT MECHANICAL SYSTEMS INTERFACE DEFINITION DWG CAL - LAT INTERFACE	
---		PROPRIETARY DATA OF STANFORD UNIVERSITY AND/OR U. S. DEPARTMENT OF ENERGY. RECIPIENT SHALL NOT PUBLISH THE INFORMATION WITHIN UNLESS GRANTED SPECIFIC PERMISSION OF STANFORD UNIVERSITY.		
---		ENGR MARTIN NORDBY DWN R MEYER 04-01-03 CHKR MARTIN NORDBY	APPROVALS MARTIN NORDBY NEIL JOHNSON GUNTHER HALLER MARC CAMPELL	DRAWING NUMBER LAT-DS-00233 REVISION NUMBER 6 D
---				SH 2 OF 4

NEXT ASSEMBLIES:				LAT MECH SYS CAL LAT INTFC DEF

REV	DESCRIPTION	DWN	CHKR	APVD	DATE
D	9 LAT-DS-00233				

5 18X 3.96 +.01 -0 DIA. X 12.7 DEEP DATUM HOLES, X & Y IN EACH OF THE 9 CELLS INDICATED.

⌖	Ø .15	X(N-1)	Y(N-1)
	Ø .15	X(N-4)	
⌖	Ø .4	U	V

X(N-1) & Y(N-1) REFER TO THE DATUM, X & Y, OF THE CELL DIRECTLY RIGHT OF THE SUBJECT CELL.

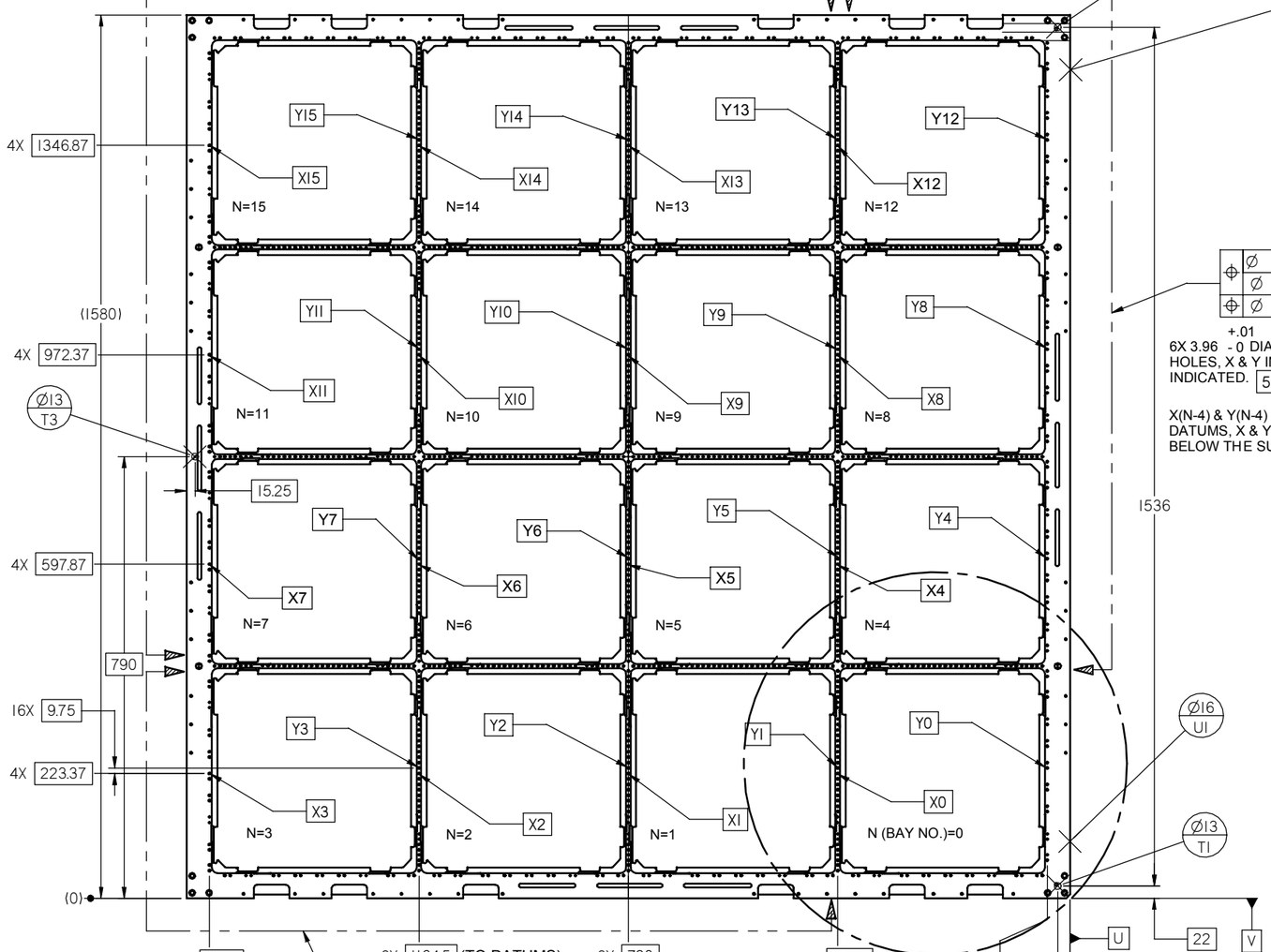

⌖	Ø .15	X(N-4)	Y(N-4)
	Ø .2	U	
⌖	Ø .4	V	

6X 3.96 +.01 -0 DIA. X 12.7 DEEP DATUM HOLES, X & Y IN EACH OF THE 3 CELLS INDICATED. 5

X(N-4) & Y(N-4) REFER TO THE DATUMS, X & Y, OF THE CELL DIRECTLY BELOW THE SUBJECT CELL.

⌖	Ø .15	X(N-1)	Y(N-1)
	Ø .2	V	
⌖	Ø .4	U	

6X 5 6X 3.96 +.01 -0 DIA. X 12.7 DEEP DATUM HOLES, X & Y IN EACH OF THE 3 CELLS INDICATED.

X(N-1) & Y(N-1) REFER TO THE DATUMS, X & Y, OF THE CELL DIRECTLY RIGHT OF THE SUBJECT CELL.

GRID BOTTOM VIEW

GRID DATUM POSITION CONTROL

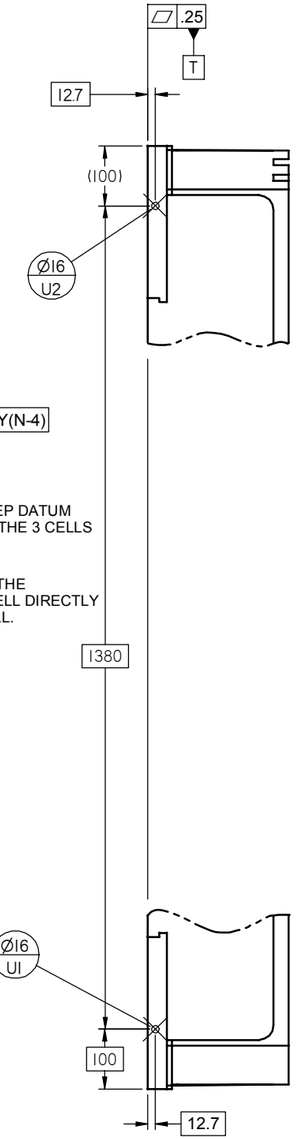

GRID SIDE VIEW

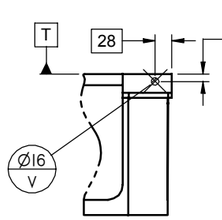

LAT COORDINATE SYSTEM
+Y
+X

NOTES:

1. TO GENERATE COMPLETE CAL MOUNTING HOLE ARRAY, THE HOLE PATTERN SHOWN ON SHEET 4 FOR GRID BAY # 0 IS INDEXED IN THE +X & +Y DIRECTIONS FOR EACH SUCCESSIVE BAY.
2. HOLE PATTERN AND WALL DIMENSIONS ARE IDENTICAL FOR ALL 16 BAYS.
3. TO GENERATE ENTIRE PATTERN FOR THIS BAY ROTATE THE DIMENSIONED ARRAY OF HOLES 90 DEGREES ABOUT CENTER OF BAY FOR EACH OF THE REMAINING 3 SIDES.
4. HOLE DESCRIPTION:
   A. #8-32 UNC X 8.3 DP HELICOIL (MAX OD=5.59 MM)
   B. #6-32 UNC X 7 DP HELICOIL (MAX OD=4.90 MM)
5. PINS IN GRID: DATUMS X AND Y ARE REAMED FOR #24 DRILL ROD PIN. PRESS FIT Ø3.962 X 19.05 LG ST STEEL BULLET-NOSE PIN INTO GRID. HEIGHT OF EXPOSED PIN IS 7.62±.13.
6. TAB SURFACES TO BE ALODINED. MASK, IF NEEDED, DURING ANY PLATING/COATING OPERATION.
7. 8X (9.75 DIA.) CLEARANCE HOLES APPLY ON SIDES WITH (4 DIA.) REAMED HOLES FOR D AND E. 9X APPLIES ON ORTHOGONAL SIDES.

NEXT ASSEMBLIES:

DIMENSIONING AND TOLERANCING IS IN ACCORDANCE WITH ASME Y14.5M-1994.

UNLESS OTHERWISE SPECIFIED
DIMENSIONS ARE IN MM.
TOLERANCES:
BREAK EDGES .2-.5
INTERNAL CORNERS R.4 MAX
FRACTIONS ± ---
DEC .XX ± .2
.XXX ± ---
.XXXX ± ---
ANGLE ± ---
ALL SURF ---

SCALE: 1:4

DO NOT SCALE DRAWING

CAD FILE NAME: LAT-DS-00233-6.dft

STANFORD LINEAR ACCELERATOR CENTER
U.S. DEPARTMENT OF ENERGY
STANFORD UNIVERSITY STANFORD, CALIFORNIA

PROPRIETARY DATA OF STANFORD UNIVERSITY AND/OR U. S. DEPARTMENT OF ENERGY. RECIPIENT SHALL NOT PUBLISH THE INFORMATION WITHIN UNLESS GRANTED SPECIFIC PERMISSION OF STANFORD UNIVERSITY.

		DATE
ENGR	MARTIN NORDBY	
DWN	R MEYER	04-01-03
CHKR	MARTIN NORDBY	

APPROVALS
MARTIN NORDBY
NEIL JOHNSON
GUNTHER HALLER
MARC CAMPELL

LAT MECHANICAL SYSTEMS INTERFACE DEFINITION DWG CAL - LAT INTERFACE

DRAWING NUMBER LAT-DS-00233
REVISION NUMBER 6
D
SH 3 OF 4

LAT MECH SYS CAL LAT INTFC DEF

SLAC FORMAT V2.0

REV	DESCRIPTION	DWN	CHKR	APVD	DATE
D	9 LAT-DS-00233				

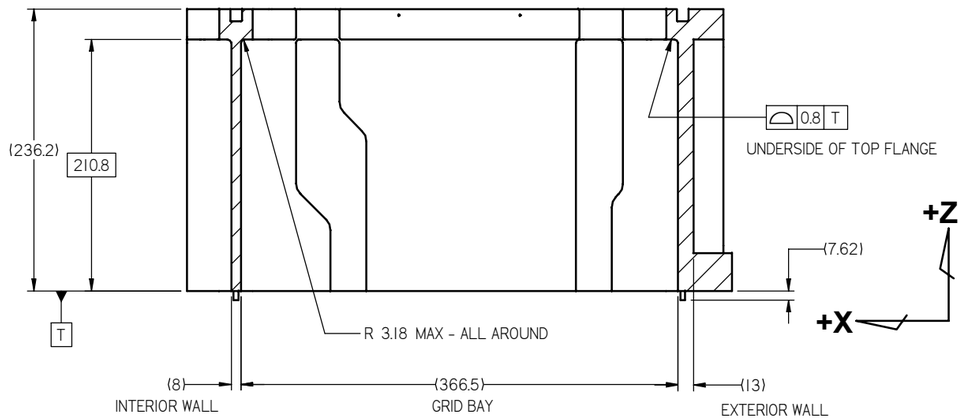

SECTION D-D

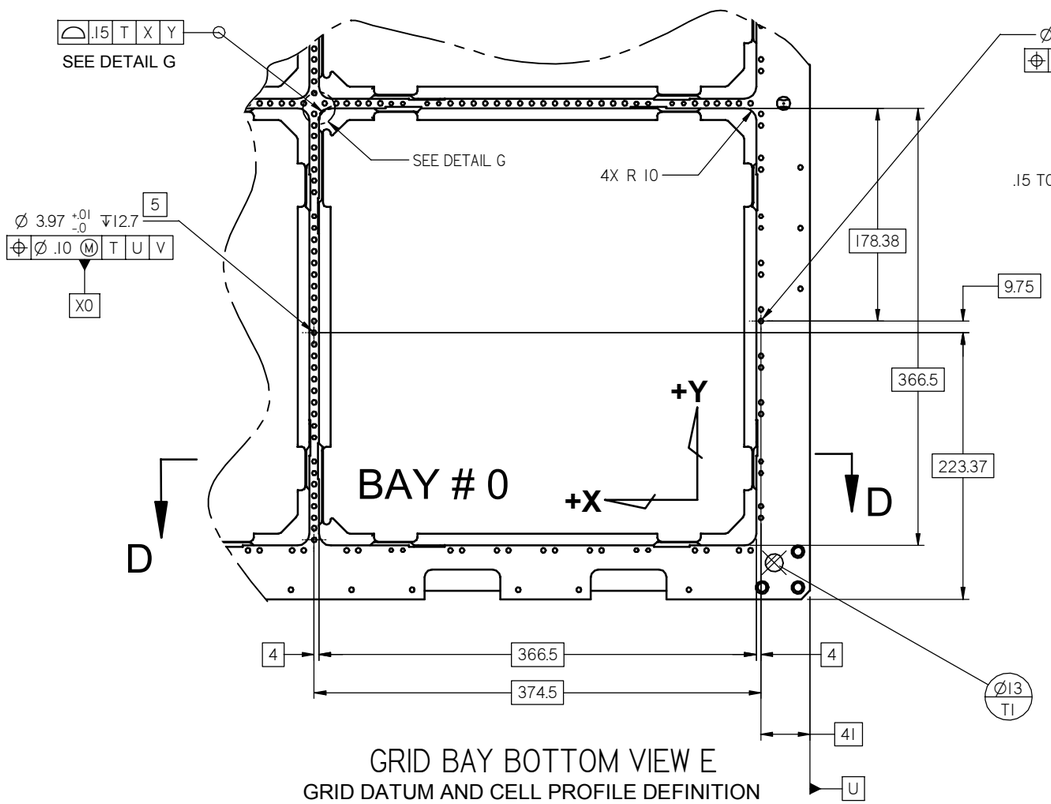

GRID BAY BOTTOM VIEW E

GRID DATUM AND CELL PROFILE DEFINITION

SEE ALSO SHEET 3

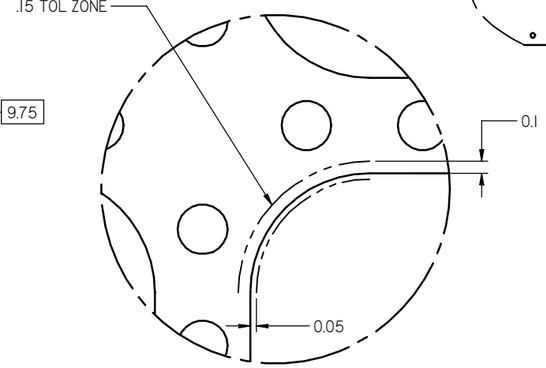

DETAIL G

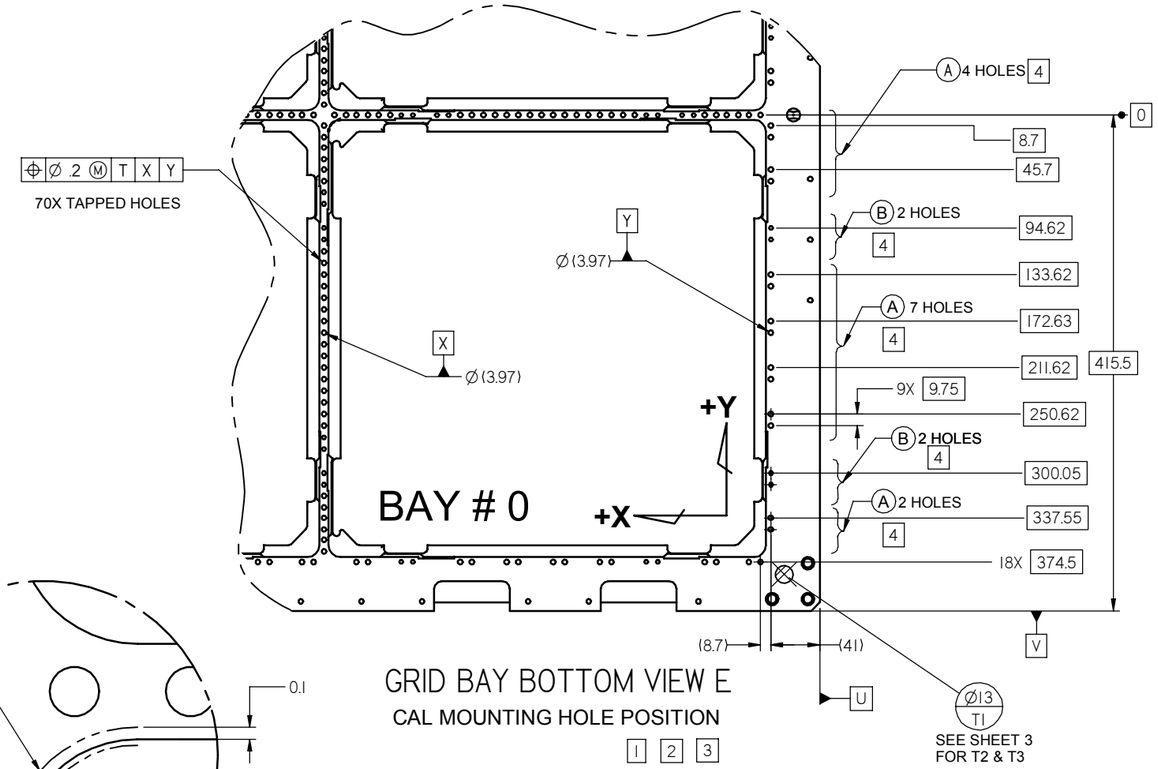

SEE SHEET 3
FOR T2 & T3

GRID BAY BOTTOM VIEW E

CAL MOUNTING HOLE POSITION

1 2 3

---	DIMENSIONING AND TOLERANCING IS IN ACCORDANCE WITH ASME Y14.5M-1994.	SCALE: 1:4	DO NOT SCALE DRAWING	CAD FILE NAME: LAT-DS-00233-6.dft
---	UNLESS OTHERWISE SPECIFIED DIMENSIONS ARE IN MM. TOLERANCES: BREAK EDGES .2-.5 INTERNAL CORNERS R.4 MAX FRACTIONS ± --- DEC .XX ± .2 .XXX ± --- .XXXX ± --- ANGLE ± --- ALL SURF ---	STANFORD LINEAR ACCELERATOR CENTER U.S. DEPARTMENT OF ENERGY STANFORD UNIVERSITY STANFORD, CALIFORNIA	LAT MECHANICAL SYSTEMS INTERFACE DEFINITION DWG CAL - LAT INTERFACE	
---		PROPRIETARY DATA OF STANFORD UNIVERSITY AND/OR U. S. DEPARTMENT OF ENERGY. RECIPIENT SHALL NOT PUBLISH THE INFORMATION WITHIN UNLESS GRANTED SPECIFIC PERMISSION OF STANFORD UNIVERSITY.		
---		ENGR MARTIN NORDBY DATE / DWN R MEYER 04-01-03 / CHKR MARTIN NORDBY	APPROVALS MARTIN NORDBY NEIL JOHNSON GUNTHER HALLER MARC CAMPELL	DRAWING NUMBER LAT-DS-00233 / REVISION NUMBER 6 / D
---				SH 4 OF 4

NEXT ASSEMBLIES:				LAT MECH SYS CAL LAT INTFC DEF

SLAC FORMAT V2.0