REVISION				
SYM	ZONE	DESCRIPTION	DATE	APPROVAL

NOTES: UNLESS OTHERWISE SPECIFIED

1. FINISHED DIMENSIONS AFTER POLISHING
2. APPROXIMATE LOCATION OF V-MARK (FOR REFERENCE ONLY)
3. POLISH ALL SURFACES EXCEPT END FACES.
4. ROUGHEN AS NECESSARY TO ACHIEVE THE PROPER LIGHT TAPERING. CLEAN WITH DRY CLEAN AIR SUPPLIED BY KALMAR (CAN).
5. MAX AND MIN OF OPPOSING CHAMFER SURFACES.
6. VALUES ARE MAXIMUM DIMENSION.
7. END FACES SHOULD BE INSPECTED USING A 10X LOOP (WITH RETICLE HAVING A 0.1 mm RESOLUTION). ANY CRACKS ON THE EDGES GREATER THAN 0.1 mm ARE NOT ACCEPTABLE. MINOR SCRATCHES ON THE DIODE BONDING AREA ARE ACCEPTABLE.

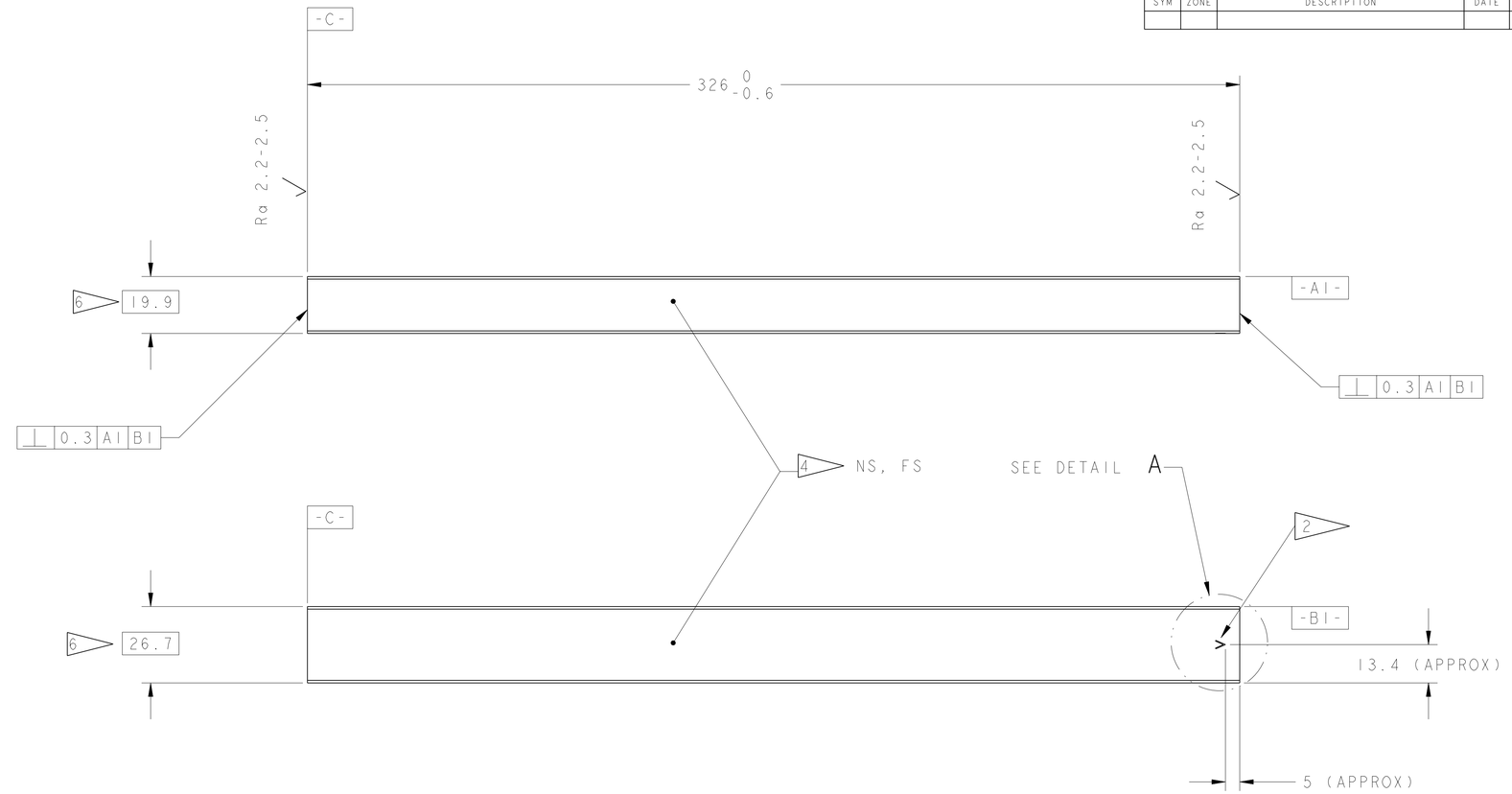

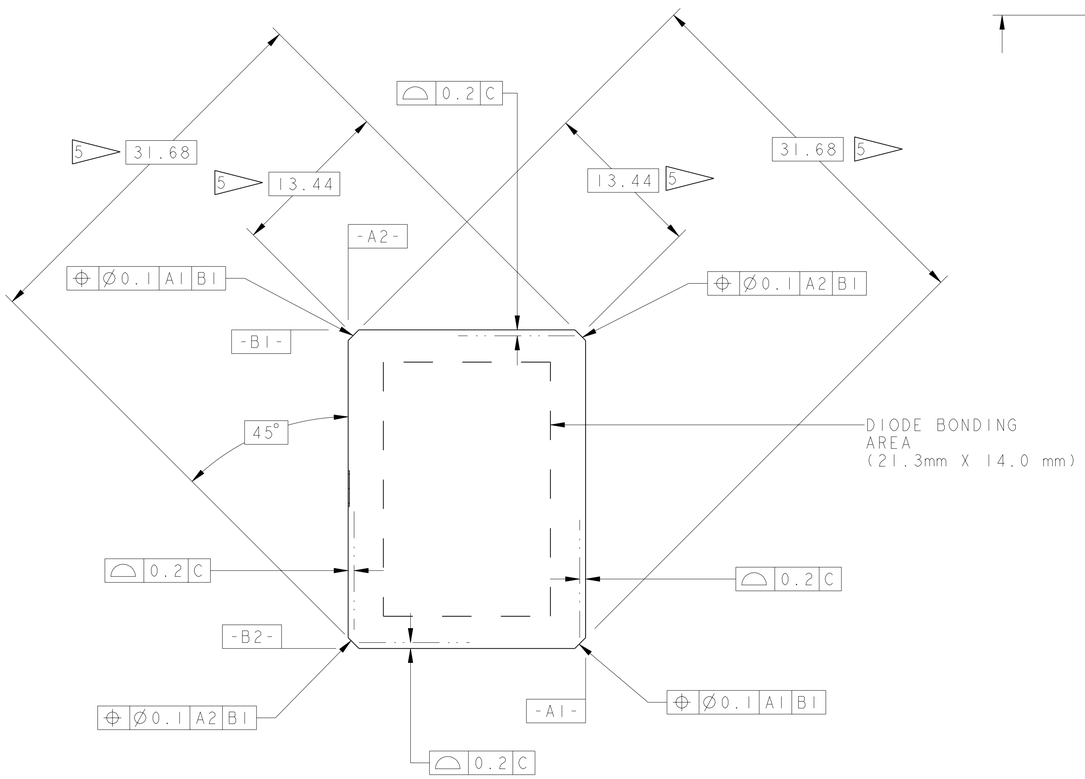

SCALE 4/1

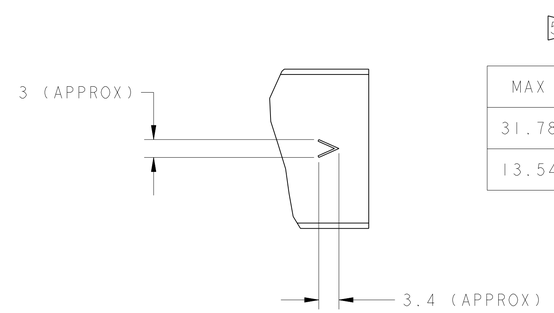

5

MAX	MIN
31.78	31.58
13.54	13.34

DETAIL A
SCALE 2/1
FOR REFERENCE ONLY

REQD	REQD	ITEM NO	PART NO.	DESCRIPTION	MATERIAL SPEC
		AR	—	CsI (Tl) CRYSTAL BAR	LAT-SS-00820

LIST OF MATERIAL

NAME	INIT	DATE
DESIGNER -		
DRAWN BY -		
CHECKED -		
APPROVED-STRESS -		
APPROVED-QA -		
APPROVED-ENGINEER -		
APPROVED -		
APPROVED -		

NEXT ASSY: - USED ON: -

TASK NO: -

CM CLASSIFICATION: -

METRIC / HYBRID METRIC/INCH

THIRD ANGLE PROJECTION

UNLESS OTHERWISE SPECIFIED: ALL DIMENSION ARE IN MILLIMETERS AND APPLY AFTER FINISH

DIMENSION TOLERANCES

0.X ±0.1 ANGLE±0.5°
X ±0.15
XX ±0.3
XXX ±0.8
XXXX ±1.5

0.2-0.4 ✓ FINISH IN MICROMETERS

INTERPRET DRAWING PER ANSI Y14.5M-1982
REMOVE ALL BURRS AND SHARP EDGES R0.25 OR CHAMFER MAX

MODEL NAME: LAT-DS-01115-01 -.2
DRW VERSION: -.2
PRO/ENGINEER VERSION: 2000i2

GLAST

TITLE
CsI CRYSTAL, CAL CDE FLIGHT

CAGE CODE: D

LAT-DS-01115-01 REV -

SCALE: 1/1 WT APPROX: - SH 1 OF 1

FOLD LINE