REVISION				
SYM	ZONE	DESCRIPTION	DATE	APPROVAL

NOTES: UNLESS OTHERWISE SPECIFIED

1. CHEMICAL CONVERSION COAT IAW MIL-C-5541, CLASS 1A, BEFORE INSTALLING INSERTS.

2. INSTALL THREADED INSERTS IAW MS33537. BREAK OFF TANG AFTER INSTALLATION.

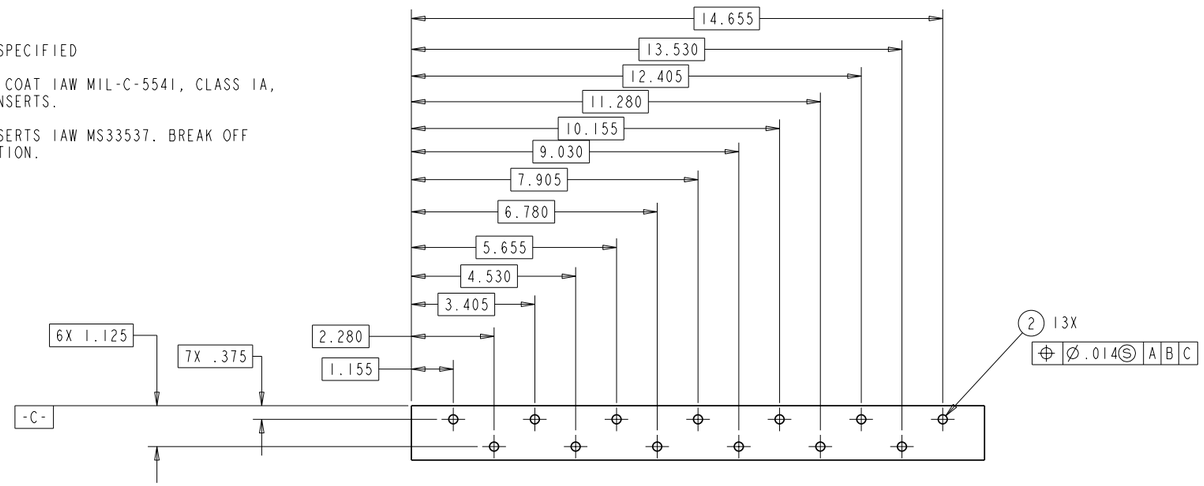

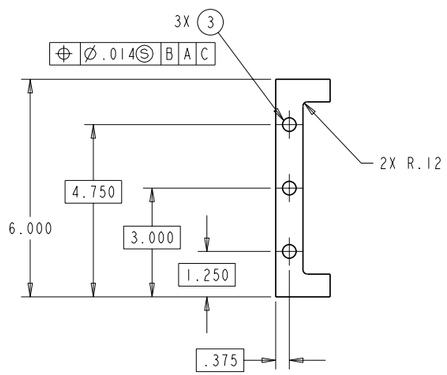

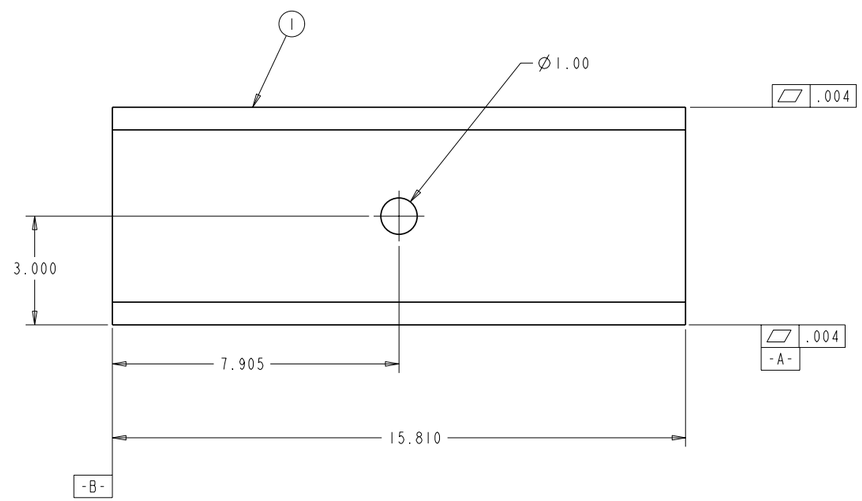

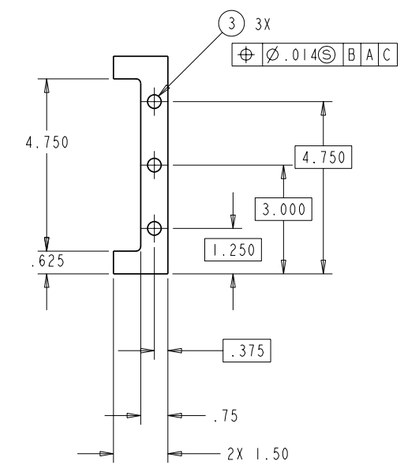

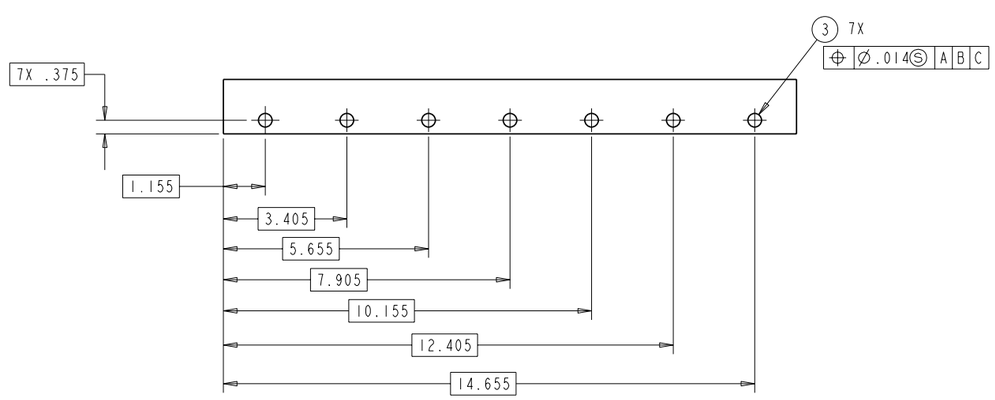

REQD	REQD	NO	ITEM	PART NO.	DESCRIPTION	MATERIAL SPEC
	13	3		1191-6BN 0562	INSERT, .375-24 UNF X .562 L	
	13	2		1191-4BN 0375	INSERT, .250-28 UNF X .375 L	
	AR	1		——	PLATE AL ALY	6061-T651

LIST OF MATERIAL

NAME	INIT	DATE
DESIGNER K. Wolko		
DRAWN BY -		
CHECKED -		
APPROVED-STRESS -		
APPROVED-QA -		
APPROVED-ENGINEER -		
APPROVED -		
APPROVED -		

UNLESS OTHERWISE SPECIFIED: ALL DIMENSION ARE IN INCHES AND APPLY AFTER FINISH

DIMENSION TOLERANCES

.XX:	±0.01
.XXX:	±0.005
ANGLE:	±0.5°
FRACTIONS:	±1/16

125

INTERPRET DRAWING PER ANSI Y14.5M-1982
REMOVE ALL BURRS AND SHARP EDGES R.010 OR CHAMFER MAX

MODEL NAME: LAT-DS-01516 - . -
DRW VERSION: - . -
PRO/ENGINEER VERSION: 2001

GLAST

SPACE SCIENCES DIVISION
NAVAL RESEARCH LABORATORY
WASHINGTON, DC

TITLE

CHANNEL, SHORT, VIBE TEST FIXTURE GLAST

CAGE CODE		REV
D	LAT-DS-01516	-
-	SCALE: 0.500	WT APPROX: -

SH 1 OF 1

METRIC	
HYBRID METRIC/INCH	

THIRD ANGLE PROJECTION

LAT-DS-01514	GLAST
NEXT ASSY	USED ON
TASK NO: -	

CM CLASSIFICATION
D

FOLD LINE