GLAST LAT SPECIFICATION	Document # **LAT-PS-01335**	Date Effective 29 Jan 2003
	Prepared by(s) James Ampe	Supersedes None
	Subsystem/Office Calorimeter Subsystem	
Document Title **LAT Calorimeter AFEE Circuit Card Assembly Test Procedure**		

Gamma-ray Large Area Space Telescope (GLAST)

Large Area Telescope (LAT) Calorimeter

AFEE Circuit Card Assembly Test Procedure

DOCUMENT APPROVAL

Prepared by:

James Ampe CAL Electrical Subsystem Lead	Date
Bob Kraeuter CAL System Engineer	Date

Approved by:

Gunther Haller LAT Electronics Manager	Date
W. Neil Johnson CAL Subsystem Manager	Date

Hard copies of this document are for REFERENCE ONLY and should not be considered the latest revision.

CHANGE HISTORY LOG

Revision	Effective Date	Description of Changes
01	1/13/03	Initial Release

Table of Contents

1 INTRODUCTION 6
1.1 PURPOSE 6
1.2 APPLICABLE DOCUMENTS 6
1.3 DEFINITIONS AND ACRONYMS 6
1.3.1 Acronyms 6
1.3.2 Definitions 6
2 ANALOG FRONT END ELECTROINCS DESCRIPTION 7
3 TEST DESCRIPTION 8
3.1 Flight test Hardware Verification 8
3.1.1 Unpowered Test 9
3.1.2 TEM Cal Connector Powered Test 10
3.2 AFEE Circuit Board Interface, Unpowered Test 11
3.2.1 Receiving Inspection Procedure Following Assembly: 11
3.2.2 AFEE "Y" Shaped Cable Continuity Test 11
3.3 AFEE Board Power Up Test 13
3.4 AFEE Board Functional Tests. 14
3.4.1 AFEE Board Register Write – Read Tests 14
4 APPENDIX A, TEM ELECTRICAL INTERFACE TEST FORMS 15
4.1 Appendix B, AFEE Cable Electrical Test Forms 21
4.2 AFEE Unpowered Electrical Test Form 24
4.3 AFEE Powered Electrical Test Form 25

List of Figures

Figure 2-1 – AFEE to TEM Layout. 7
Figure 3-1 – TEM 69-pin Contact Layout 8
Figure 3-2 – AFEE “Y” Cable 37-pin Contact Layout 13
Figure 3-3 – AFEE “Y”-shaped Cable 69-pin Contact Layout 13
Figure 4-1 – 69-pin Contact Layout 15
Figure 4-2 – AFEE 69-pin and AFEE Cable 37 Contact Plug Layout 21
Figure 4-3 – AFEE 69-pin Contact Layout 24
Figure 4-4 – AFEE Bias Voltage Measurement Location 25

List of Tables

Table 3-1 – TEM Cal Connector Unpowered Ground Test Points 8
Table 3-2 – AFEE-Y Shaped Cable J1 to J3 Continuity 11
Table 3-3 – AFEE "Y" Shaped Cable J2 to J3 Continuity Test 12
Table 3-4 – Calorimeter Module Connector Unpowered Ground Test Points 13
Table 3-5 – AFEE CCA Power up Test Points 14
Table 4-1 – AFEE Power up Test Points 25

1 INTRODUCTION

1.1 PURPOSE

This document details the testing performed on the AFEE Circuit Card assemblies prior to integration into the Calorimeter Module.

1.2 APPLICABLE DOCUMENTS

The following documents are applicable to the extent specified within. Unless otherwise indicated, the latest issue in effect shall apply. In the event of a conflict between these documents and the contents of LAT-SS-01335, those contained herein shall be considered the superseding requirement.

NASA-STD-8739.7	Electrostatic Discharge Control
LAT-SS-00115	LAT Mechanical Systems – Level III Specification
LAT-MD-00408	LAT Program Instrument Performance Verification Plan
LAT-SS-00210	LAT-CAL Subsystem Level IV Specification
LAT-SS-00222	Calorimeter Module Assembly, Test, and Calibration Requirements
LAT-SS-00262	Calorimeter Module Assembly and Test Plan
LAT-SS-01345	Calorimeter Module Verification & Environmental Test Plan
LAT-SS-01371	Calorimeter Module Functional Test Procedure

1.3 DEFINITIONS AND ACRONYMS

1.3.1 Acronyms

AFEE	Analog Front End Electronics of the Calorimeter
CAL	Calorimeter Subsystem of the LAT
CCA	Circuit Card Assembly
CDE	Crystal Detector Element of the PEM
DAS	Data Acquisition System
ESD	Electrostatic Discharge
GCFE	Glast Calorimeter Front-end Electronics
GCRC	Glast Calorimeter Readout Control electronics
GLAST	Gamma-Ray Large Area Space Telescope
LAT	Large Area Telescope
PEM	Pre-Electronics Module of the CAL
TBD	To Be Determined
TBR	To Be Resolved
TEM	Tower Electronics Module

1.3.2 Definitions

Dead time	Time during which the instrument does not sense and/or record gamma ray events during normal operations
MeV	Million Electron Volts, 10^6 eV
nsec	nanoseconds (10^{-9} second)
usec	microseconds (10^{-6} second)

2 ANALOG FRONT END ELECTROINCS DESCRIPTION

The Calorimeter Analog Front End Electroincs (AFEE) boards are the flight electronics which convert the CDE PIN diode electrical signals to digital bits, which are then sent to the Tower Electronics Module (TEM). There is one AFEE board per side of the cubic shaped Calorimeter. Each Calorimeter module consists of two AFEE-X boards and two AFEE-Y boards. A "Y" shaped cable from two 37 contact Nano connectors joined to one 69 contact micro connector is part of the assembly. The electrical interface between the TEM and the Calorimeter is at the 69 contact micro connector.

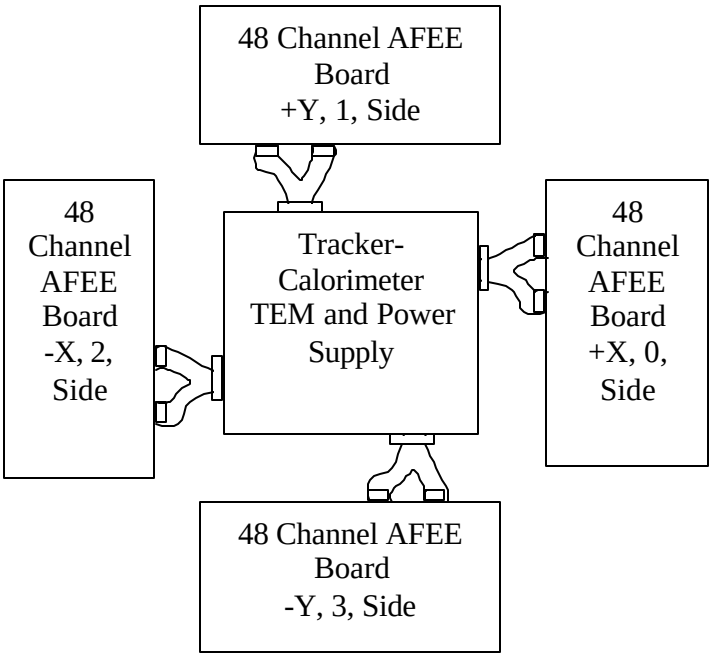

Figure 2-1 – AFEE to TEM Layout.

3 TEST DESCRIPTION

The AFEE circuit board testing is performed in the following steps:

1) Checking flight test hardware connected to AFEE board
2) Unpowered test of AFEE board interface
3) Powering up AFEE board and checking critical voltages
4) Functional testing of AFEE board

3.1 Flight test Hardware Verification

Table 3-1 – TEM Cal Connector Unpowered Ground Test Points

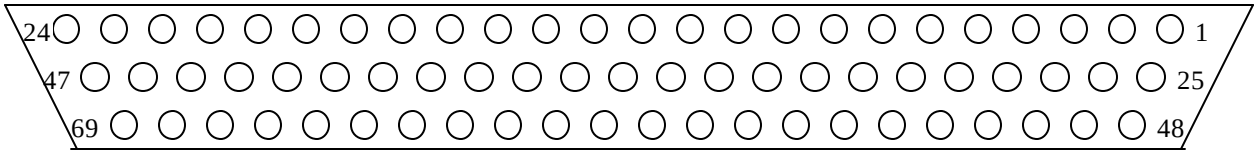

69 Contact TEM Receptacle Mating Face

Figure 3-1 – TEM 69-pin Contact Layout

Pin Number	Signal	TEM In/Out
1	Unused, TEM Gnd	N/A
25	Unused, TEM Gnd	N/A
26	Unused, TEM Gnd	N/A
27	ANA RET (3)	Power
46	DIG RET (3)	Power
47	DIG RET (4)	Power
48	Unused, TEM Gnd	N/A
51	CAL_RIGHT_RET (GND)	Output
54	ANA RET (1)	Power
55	ANA RET (2)	Power
60	DIG RET (1)	Power
61	DIG RET (2)	Power
64	BIAS RET (1)	Power
65	BIAS RET (2)	Power
69	BIAS RET (3)	Power

3.1.1 Unpowered Test

3.1.2 TEM Cal Connector Powered Test

Number	Signal	Voltage Reading
1	Unused, TEM Gnd	0V
2	CAL_NRESETP	0 to 3.3V
3	CAL_NRESETM	0 to 3.3V
4	CAL_NCMDP	0 to 3.3V
5	CAL_NCMDM	0 to 3.3V
6	CAL_CLKP	0 to 3.3V
7	CAL_CLKM	0 to 3.3V
8	CAL_NTREQLE0P	0 to 3.3V
9	CAL_NTREQLE0M	0 to 3.3V
10	CAL_NTREQHE0P	0 to 3.3V
11	CAL_NTREQHE0M	0 to 3.3V
12	CAL_NDATA0_0P	0 to 3.3V
13	CAL_NDATA0_0M	0 to 3.3V
14	CAL_NDATA1_0P	0 to 3.3V
15	CAL_NDATA1_0M	0 to 3.3V
16	CAL_NTREQLE1P	0 to 3.3V
17	CAL_NTREQLE1M	0 to 3.3V
18	CAL_NTREQHE1P	0 to 3.3V
19	CAL_NTREQHE1M	0 to 3.3V
20	CAL_NDATA0_1P	0 to 3.3V
21	CAL_NDATA0_1M	0 to 3.3V
22	Spare	N/A
23	3.3V DIGITAL (3)	3.3V
24	3.3V DIGITAL (4)	3.3V
25	Unused, TEM Gnd	0V
26	Unused, TEM Gnd	0V
27	ANA RET (3)	0V
28	CAL_NDATA1_1P	0 to 3.3V
29	CAL_NDATA1_1M	0 to 3.3V
30	CAL_NTREQLE2P	0 to 3.3V
31	CAL_NTREQLE2M	0 to 3.3V
32	CAL_NTREQHE2P	0 to 3.3V
33	CAL_NTREQHE2M	0 to 3.3V
34	CAL_NDATA0_2P	0 to 3.3V
35	CAL_NDATA0_2M	0 to 3.3V

Number	Signal	Voltage Reading
36	CAL_NDATA1_2P	0 to 3.3V
37	CAL_NDATA1_2M	0 to 3.3V
38	CAL_NTREQLE3P	0 to 3.3V
39	CAL_NTREQLE3M	0 to 3.3V
40	CAL_NTREQHE3P	0 to 3.3V
41	CAL_NTREQHE3M	0 to 3.3V
42	CAL_NDATA0_3P	0 to 3.3V
43	CAL_NDATA0_3M	0 to 3.3V
44	CAL_NDATA1_3P	0 to 3.3V
45	CAL_NDATA1_3M	0 to 3.3V
46	DIG RET (3)	0V
47	DIG RET (4)	0V
48	Unused, TEM Gnd	0V
49	3.3V ANALOG (3)	3.3V
50	CAL_RIGHT_FIRST	0 to 3.3V
51	CAL_RIGHT_RET	0V
52	3.3V ANALOG (1)	3.3V
53	3.3V ANALOG (2)	3.3V
54	ANA RET (1)	0V
55	ANA RET (2)	0V
56	CAL_THERM0P	0 to 3.3V
57	CAL_THERM0M	0 to 3.3V
58	3.3V DIGITAL (1)	3.3V
59	3.3V DIGITAL (2)	3.3V
60	DIG RET (1)	0V
61	DIG RET (2)	0V
62	CAL_THERM1P	0 to 3.3V
63	CAL_THERM1M	0 to 3.3V
64	BIAS RET (1)	0V
65	BIAS RET (2)	0V
66	BIAS VOLTAGE (1)	0-100V
67	BIAS VOLTAGE (2)	0-100V
68	BIAS VOLTAGE (3)	0-100V
69	BIAS RET (3)	0V

3.2 AFEE Circuit Board Interface, Unpowered Test

3.2.1 Receiving Inspection Procedure Following Assembly:

1) Inspect circuit board for bad or missing solder joints. Inspect fine-pitch parts for solder bridging.

2) Use ohm meter to check for no power supply short circuits. Measure resistance across tantalum capacitors.

3.2.2 AFEE "Y" Shaped Cable Continuity Test

Table 3-2 – AFEE-Y Shaped Cable J1 to J3 Continuity

Nanonics AFEE End Conn-Pin	TEM End Conn-Pin	New Signal Definition
J1-1	#N/A	Unused
J1-2	J3-36	CAL_NDATA1_2P
J1-3	J3-37	CAL_NDATA1_2M
J1-4	J3-14	CAL_NDATA1_0P
J1-5	J3-15	CAL_NDATA1_0M
J1-6	J3-16	CAL_NTREQLE1P
J1-7	J3-17	CAL_NTREQLE1M
J1-8	#N/A	Unused
J1-9	J3-40	CAL_NTREQHE3P
J1-10	J3-41	CAL_NTREQHE3M
J1-11	J3-42	CAL_NDATA0_3P
J1-12	J3-43	CAL_NDATA0_3M
J1-13	J3-20	CAL_NDATA0_1P
J1-14	J3-21	CAL_NDATA0_1M
J1-15	J3-44	CAL_NDATA1_3P
J1-16	J3-45	CAL_NDATA1_3M
J1-17	J3-46	*** DIG RET (3)**
J1-18	J3-24	*** 3.3V DIGITAL (4)**
J1-19	#N/A	Unused

Nanonics AFEE End Conn-Pin	TEM End Conn-Pin	New Signal Definition
J1-20	J3-58	3.3V DIGITAL (1)
J1-21	J3-59	3.3V DIGITAL (2)
J1-22	J3-60	DIG RET (1)
J1-23	J3-61	DIG RET (2)
J1-24	J3-38	CAL_NTREQLE3P
J1-25	J3-39	CAL_NTREQLE3M
J1-26	J3-62	CAL_THERM1P
J1-27	J3-63	CAL_THERM1M
J1-28	J3-18	CAL_NTREQHE1P
J1-29	J3-19	CAL_NTREQHE1M
J1-30	J3-64	BIAS RET (1)
J1-31	J3-65	BIAS RET (2)
J1-32	J3-66	BIAS VOLTAGE (1)
J1-33	J3-67	BIAS VOLTAGE (2)
J1-34	J3-68	*** BIAS VOLTAGE (3)**
J1-35	J3-23	*** 3.3V DIGITAL (3)**
J1-36	J3-69	*** BIAS RET (3)**
J1-37	J3-47	*** DIG RET (4)**

Table 3-3 – AFEE "Y" Shaped Cable J2 to J3 Continuity Test

Nanonics AFEE End Conn-Pin	TEM End Conn-Pin	New Signal Definition
J2-1	#N/A	Unused
J2-2	#N/A	Unused
J2-3	J3-49	* 3.3V ANALOG (3)
J2-4	J3-27	* ANA RET (3)
J2-5	J3-50	CAL_RIGHT_FIRST
J2-6	J3-51	CAL_RIGHT_RET
J2-7	J3-28	CAL_NDATA1_1P
J2-8	J3-29	CAL_NDATA1_1M
J2-9	J3-52	3.3V ANALOG (1)
J2-10	J3-53	3.3V ANALOG (2)
J2-11	J3-8	CAL_NTREQLE0P
J2-12	J3-9	CAL_NTREQLE0M
J2-13	J3-54	ANA RET (1)
J2-14	J3-55	ANA RET (2)
J2-15	J3-10	CAL_NTREQHE0P
J2-16	J3-11	CAL_NTREQHE0M
J2-17	J3-56	CAL_THERM0P
J2-18	J3-57	CAL_THERM0M
J2-19	#N/A	Unused

Nanonics AFEE End Conn-Pin	TEM End Conn-Pin	New Signal Definition
J2-20	J3-2	CAL_NRESETP
J2-21	J3-3	CAL_NRESETM
J2-22	J3-4	CAL_NCMDP
J2-23	J3-5	CAL_NCMDM
J2-24	#N/A	Unused
J2-25	#N/A	Unused
J2-26	#N/A	Unused
J2-27	J3-6	CAL_CLKP
J2-28	J3-7	CAL_CLKM
J2-29	J3-30	CAL_NTREQLE2P
J2-30	J3-31	CAL_NTREQLE2M
J2-31	J3-32	CAL_NTREQHE2P
J2-32	J3-33	CAL_NTREQHE2M
J2-33	#N/A	Unused
J2-34	J3-34	CAL_NDATA0_2P
J2-35	J3-35	CAL_NDATA0_2M
J2-36	J3-12	CAL_NDATA0_0P
J2-37	J3-13	CAL_NDATA0_0M

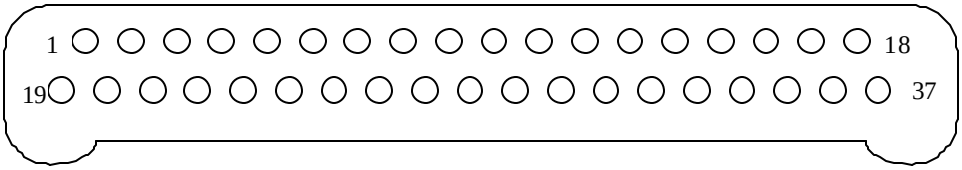

AFEE 37 Contact Cable Plug Mating Face

Figure 3-2 – AFEE "Y" Cable 37-pin Contact Layout

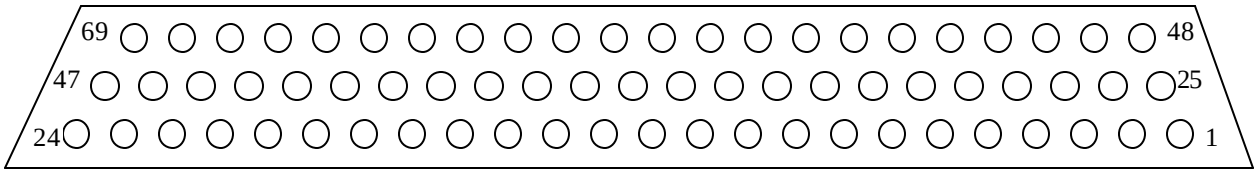

AFEE 69 Contact Plug Mating Face

Figure 3-3 – AFEE "Y" -shaped Cable 69-pin Contact Layout

Table 3-4 – Calorimeter Module Connector Unpowered Ground Test Points

Pin Number	Signal	Type
27	ANA RET (3)	Power
46	DIG RET (3)	Power
47	DIG RET (4)	Power
51	CAL_RIGHT_RET (GND)	Output
54	ANA RET (1)	Power
55	ANA RET (2)	Power
60	DIG RET (1)	Power
61	DIG RET (2)	Power
64	BIAS RET (1)	Power
65	BIAS RET (2)	Power
69	BIAS RET (3)	Power

3.3 AFEE Board Power Up Test

Connect connector J3 of 'Y' shaped AFEE cable to mating TEM connector. Power up TEM and measure the voltages shown in **Error! Reference source not found.**.

Table 3-5 – AFEE CCA Power up Test Points

Signal	Type
ANA 3.3 Volts	Power
DIG 3.3 Volts	Power
Bias, 0 to +100 Volts	Power

3.4 AFEE Board Functional Tests.

3.4.1 AFEE Board Register Write – Read Tests

TBD

4 APPENDIX A, TEM ELECTRICAL INTERFACE TEST FORMS

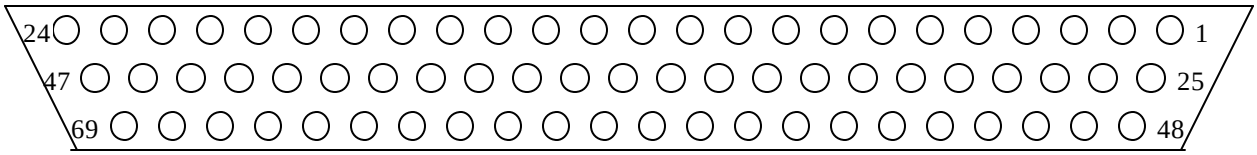

69 Contact TEM Receptacle Mating Face

Figure 4-1 – 69-pin Contact Layout

TEM Electrical Checkout, Unpowered Interface Test Form TEM Serial No:

TEM Connector 1	**Unpowered TEM Connector Test**	
Pin Number	**Signal**	**Results**
1	Unused, TEM Gnd	
25	Unused, TEM Gnd	
26	Unused, TEM Gnd	
27	ANA RET (3)	
46	DIG RET (3)	
47	DIG RET (4)	
48	Unused, TEM Gnd	
51	CAL_RIGHT_RET (GND)	
54	ANA RET (1)	
55	ANA RET (2)	
60	DIG RET (1)	
61	DIG RET (2)	
64	BIAS RET (1)	
65	BIAS RET (2)	
69	BIAS RET (3)	

TEM Connector 2	**Unpowered TEM Connector Test**	
Pin Number	**Signal**	**Results**
1	Unused, TEM Gnd	
25	Unused, TEM Gnd	
26	Unused, TEM Gnd	
27	ANA RET (3)	
46	DIG RET (3)	
47	DIG RET (4)	
48	Unused, TEM Gnd	
51	CAL_RIGHT_RET (GND)	
54	ANA RET (1)	
55	ANA RET (2)	
60	DIG RET (1)	
61	DIG RET (2)	
64	BIAS RET (1)	
65	BIAS RET (2)	
69	BIAS RET (3)	

TEM Connector 3	**Unpowered TEM Connector Test**	
Pin Number	**Signal**	**Results**
1	Unused, TEM Gnd	
25	Unused, TEM Gnd	
26	Unused, TEM Gnd	
27	ANA RET (3)	
46	DIG RET (3)	
47	DIG RET (4)	
48	Unused, TEM Gnd	
51	CAL_RIGHT_RET (GND)	
54	ANA RET (1)	
55	ANA RET (2)	
60	DIG RET (1)	
61	DIG RET (2)	
64	BIAS RET (1)	
65	BIAS RET (2)	
69	BIAS RET (3)	

TEM Connector 4	**Unpowered TEM Connector Test**	
Pin Number	**Signal**	**Results**
1	Unused, TEM Gnd	
25	Unused, TEM Gnd	
26	Unused, TEM Gnd	
27	ANA RET (3)	
46	DIG RET (3)	
47	DIG RET (4)	
48	Unused, TEM Gnd	
51	CAL_RIGHT_RET (GND)	
54	ANA RET (1)	
55	ANA RET (2)	
60	DIG RET (1)	
61	DIG RET (2)	
64	BIAS RET (1)	
65	BIAS RET (2)	
69	BIAS RET (3)	

TEM Connector 1, Powered Electrical Interface Test Form TEM Serial No:

Number	Signal	Voltage Range	Measurement	Number	Signal	Voltage Range	Measurement
1	Unused, TEM Gnd	0V		36	CAL_NDATA1_2P	0 to 3.3V	
2	CAL_NRESETP	0 to 3.3V		37	CAL_NDATA1_2M	0 to 3.3V	
3	CAL_NRESETM	0 to 3.3V		38	CAL_NTREQLE3P	0 to 3.3V	
4	CAL_NCMDP	0 to 3.3V		39	CAL_NTREQLE3M	0 to 3.3V	
5	CAL_NCMDM	0 to 3.3V		40	CAL_NTREQHE3P	0 to 3.3V	
6	CAL_CLKP	0 to 3.3V		41	CAL_NTREQHE3M	0 to 3.3V	
7	CAL_CLKM	0 to 3.3V		42	CAL_NDATA0_3P	0 to 3.3V	
8	CAL_NTREQLE0P	0 to 3.3V		43	CAL_NDATA0_3M	0 to 3.3V	
9	CAL_NTREQLE0M	0 to 3.3V		44	CAL_NDATA1_3P	0 to 3.3V	
10	CAL_NTREQHE0P	0 to 3.3V		45	CAL_NDATA1_3M	0 to 3.3V	
11	CAL_NTREQHE0M	0 to 3.3V		46	DIG RET (3)	0V	
12	CAL_NDATA0_0P	0 to 3.3V		47	DIG RET (4)	0V	
13	CAL_NDATA0_0M	0 to 3.3V		48	Unused, TEM Gnd	0V	
14	CAL_NDATA1_0P	0 to 3.3V		49	3.3V ANALOG (3)	3.3V	
15	CAL_NDATA1_0M	0 to 3.3V		50	CAL_RIGHT_FIRST	0 to 3.3V	
16	CAL_NTREQLE1P	0 to 3.3V		51	CAL_RIGHT_RET	0V	
17	CAL_NTREQLE1M	0 to 3.3V		52	3.3V ANALOG (1)	3.3V	
18	CAL_NTREQHE1P	0 to 3.3V		53	3.3V ANALOG (2)	3.3V	
19	CAL_NTREQHE1M	0 to 3.3V		54	ANA RET (1)	0V	
20	CAL_NDATA0_1P	0 to 3.3V		55	ANA RET (2)	0V	
21	CAL_NDATA0_1M	0 to 3.3V		56	CAL_THERM0P	0 to 3.3V	
22	Spare	N/A		57	CAL_THERM0M	0 to 3.3V	
23	3.3V DIGITAL (3)	3.3V		58	3.3V DIGITAL (1)	3.3V	
24	3.3V DIGITAL (4)	3.3V		59	3.3V DIGITAL (2)	3.3V	
25	Unused, TEM Gnd	0V		60	DIG RET (1)	0V	
26	Unused, TEM Gnd	0V		61	DIG RET (2)	0V	
27	ANA RET (3)	0V		62	CAL_THERM1P	0 to 3.3V	
28	CAL_NDATA1_1P	0 to 3.3V		63	CAL_THERM1M	0 to 3.3V	
29	CAL_NDATA1_1M	0 to 3.3V		64	BIAS RET (1)	0V	
30	CAL_NTREQLE2P	0 to 3.3V		65	BIAS RET (2)	0V	
31	CAL_NTREQLE2M	0 to 3.3V		66	BIAS VOLTAGE (1)	0-100V	
32	CAL_NTREQHE2P	0 to 3.3V		67	BIAS VOLTAGE (2)	0-100V	
33	CAL_NTREQHE2M	0 to 3.3V		68	BIAS VOLTAGE (3)	0-100V	
34	CAL_NDATA0_2P	0 to 3.3V		69	BIAS RET (3)	0V	
35	CAL_NDATA0_2M	0 to 3.3V					

TEM Connector 2, Powered Electrical Interface Test Form TEM Serial No:

Number	Signal	Voltage Range	Measurement	Number	Signal	Voltage Range	Measurement
1	Unused, TEM Gnd	0V		36	CAL_NDATA1_2P	0 to 3.3V	
2	CAL_NRESETP	0 to 3.3V		37	CAL_NDATA1_2M	0 to 3.3V	
3	CAL_NRESETM	0 to 3.3V		38	CAL_NTREQLE3P	0 to 3.3V	
4	CAL_NCMDP	0 to 3.3V		39	CAL_NTREQLE3M	0 to 3.3V	
5	CAL_NCMDM	0 to 3.3V		40	CAL_NTREQHE3P	0 to 3.3V	
6	CAL_CLKP	0 to 3.3V		41	CAL_NTREQHE3M	0 to 3.3V	
7	CAL_CLKM	0 to 3.3V		42	CAL_NDATA0_3P	0 to 3.3V	
8	CAL_NTREQLE0P	0 to 3.3V		43	CAL_NDATA0_3M	0 to 3.3V	
9	CAL_NTREQLE0M	0 to 3.3V		44	CAL_NDATA1_3P	0 to 3.3V	
10	CAL_NTREQHE0P	0 to 3.3V		45	CAL_NDATA1_3M	0 to 3.3V	
11	CAL_NTREQHE0M	0 to 3.3V		46	DIG RET (3)	0V	
12	CAL_NDATA0_0P	0 to 3.3V		47	DIG RET (4)	0V	
13	CAL_NDATA0_0M	0 to 3.3V		48	Unused, TEM Gnd	0V	
14	CAL_NDATA1_0P	0 to 3.3V		49	3.3V ANALOG (3)	3.3V	
15	CAL_NDATA1_0M	0 to 3.3V		50	CAL_RIGHT_FIRST	0 to 3.3V	
16	CAL_NTREQLE1P	0 to 3.3V		51	CAL_RIGHT_RET	0V	
17	CAL_NTREQLE1M	0 to 3.3V		52	3.3V ANALOG (1)	3.3V	
18	CAL_NTREQHE1P	0 to 3.3V		53	3.3V ANALOG (2)	3.3V	
19	CAL_NTREQHE1M	0 to 3.3V		54	ANA RET (1)	0V	
20	CAL_NDATA0_1P	0 to 3.3V		55	ANA RET (2)	0V	
21	CAL_NDATA0_1M	0 to 3.3V		56	CAL_THERM0P	0 to 3.3V	
22	Spare	N/A		57	CAL_THERM0M	0 to 3.3V	
23	3.3V DIGITAL (3)	3.3V		58	3.3V DIGITAL (1)	3.3V	
24	3.3V DIGITAL (4)	3.3V		59	3.3V DIGITAL (2)	3.3V	
25	Unused, TEM Gnd	0V		60	DIG RET (1)	0V	
26	Unused, TEM Gnd	0V		61	DIG RET (2)	0V	
27	ANA RET (3)	0V		62	CAL_THERM1P	0 to 3.3V	
28	CAL_NDATA1_1P	0 to 3.3V		63	CAL_THERM1M	0 to 3.3V	
29	CAL_NDATA1_1M	0 to 3.3V		64	BIAS RET (1)	0V	
30	CAL_NTREQLE2P	0 to 3.3V		65	BIAS RET (2)	0V	
31	CAL_NTREQLE2M	0 to 3.3V		66	BIAS VOLTAGE (1)	0-100V	
32	CAL_NTREQHE2P	0 to 3.3V		67	BIAS VOLTAGE (2)	0-100V	
33	CAL_NTREQHE2M	0 to 3.3V		68	BIAS VOLTAGE (3)	0-100V	
34	CAL_NDATA0_2P	0 to 3.3V		69	BIAS RET (3)	0V	
35	CAL_NDATA0_2M	0 to 3.3V					

TEM Connector 3, Powered Electrical Interface Test From. TEM Serial No:

Number	Signal	Voltage Range	Measurement	Number	Signal	Voltage Range	Measurement
1	Unused, TEM Gnd	0V		36	CAL_NDATA1_2P	0 to 3.3V	
2	CAL_NRESETP	0 to 3.3V		37	CAL_NDATA1_2M	0 to 3.3V	
3	CAL_NRESETM	0 to 3.3V		38	CAL_NTREQLE3P	0 to 3.3V	
4	CAL_NCMDP	0 to 3.3V		39	CAL_NTREQLE3M	0 to 3.3V	
5	CAL_NCMDM	0 to 3.3V		40	CAL_NTREQHE3P	0 to 3.3V	
6	CAL_CLKP	0 to 3.3V		41	CAL_NTREQHE3M	0 to 3.3V	
7	CAL_CLKM	0 to 3.3V		42	CAL_NDATA0_3P	0 to 3.3V	
8	CAL_NTREQLE0P	0 to 3.3V		43	CAL_NDATA0_3M	0 to 3.3V	
9	CAL_NTREQLE0M	0 to 3.3V		44	CAL_NDATA1_3P	0 to 3.3V	
10	CAL_NTREQHE0P	0 to 3.3V		45	CAL_NDATA1_3M	0 to 3.3V	
11	CAL_NTREQHE0M	0 to 3.3V		46	DIG RET (3)	0V	
12	CAL_NDATA0_0P	0 to 3.3V		47	DIG RET (4)	0V	
13	CAL_NDATA0_0M	0 to 3.3V		48	Unused, TEM Gnd	0V	
14	CAL_NDATA1_0P	0 to 3.3V		49	3.3V ANALOG (3)	3.3V	
15	CAL_NDATA1_0M	0 to 3.3V		50	CAL_RIGHT_FIRST	0 to 3.3V	
16	CAL_NTREQLE1P	0 to 3.3V		51	CAL_RIGHT_RET	0V	
17	CAL_NTREQLE1M	0 to 3.3V		52	3.3V ANALOG (1)	3.3V	
18	CAL_NTREQHE1P	0 to 3.3V		53	3.3V ANALOG (2)	3.3V	
19	CAL_NTREQHE1M	0 to 3.3V		54	ANA RET (1)	0V	
20	CAL_NDATA0_1P	0 to 3.3V		55	ANA RET (2)	0V	
21	CAL_NDATA0_1M	0 to 3.3V		56	CAL_THERM0P	0 to 3.3V	
22	Spare	N/A		57	CAL_THERM0M	0 to 3.3V	
23	3.3V DIGITAL (3)	3.3V		58	3.3V DIGITAL (1)	3.3V	
24	3.3V DIGITAL (4)	3.3V		59	3.3V DIGITAL (2)	3.3V	
25	Unused, TEM Gnd	0V		60	DIG RET (1)	0V	
26	Unused, TEM Gnd	0V		61	DIG RET (2)	0V	
27	ANA RET (3)	0V		62	CAL_THERM1P	0 to 3.3V	
28	CAL_NDATA1_1P	0 to 3.3V		63	CAL_THERM1M	0 to 3.3V	
29	CAL_NDATA1_1M	0 to 3.3V		64	BIAS RET (1)	0V	
30	CAL_NTREQLE2P	0 to 3.3V		65	BIAS RET (2)	0V	
31	CAL_NTREQLE2M	0 to 3.3V		66	BIAS VOLTAGE (1)	0-100V	
32	CAL_NTREQHE2P	0 to 3.3V		67	BIAS VOLTAGE (2)	0-100V	
33	CAL_NTREQHE2M	0 to 3.3V		68	BIAS VOLTAGE (3)	0-100V	
34	CAL_NDATA0_2P	0 to 3.3V		69	BIAS RET (3)	0V	
35	CAL_NDATA0_2M	0 to 3.3V					

TEM Connector 4, Powered Electrical Interface Test From. TEM Serial No:

Number	Signal	Voltage Range	Measurement	Number	Signal	Voltage Range	Measurement
1	Unused, TEM Gnd	0V		36	CAL_NDATA1_2P	0 to 3.3V	
2	CAL_NRESETP	0 to 3.3V		37	CAL_NDATA1_2M	0 to 3.3V	
3	CAL_NRESETM	0 to 3.3V		38	CAL_NTREQLE3P	0 to 3.3V	
4	CAL_NCMDP	0 to 3.3V		39	CAL_NTREQLE3M	0 to 3.3V	
5	CAL_NCMDM	0 to 3.3V		40	CAL_NTREQHE3P	0 to 3.3V	
6	CAL_CLKP	0 to 3.3V		41	CAL_NTREQHE3M	0 to 3.3V	
7	CAL_CLKM	0 to 3.3V		42	CAL_NDATA0_3P	0 to 3.3V	
8	CAL_NTREQLE0P	0 to 3.3V		43	CAL_NDATA0_3M	0 to 3.3V	
9	CAL_NTREQLE0M	0 to 3.3V		44	CAL_NDATA1_3P	0 to 3.3V	
10	CAL_NTREQHE0P	0 to 3.3V		45	CAL_NDATA1_3M	0 to 3.3V	
11	CAL_NTREQHE0M	0 to 3.3V		46	DIG RET (3)	0V	
12	CAL_NDATA0_0P	0 to 3.3V		47	DIG RET (4)	0V	
13	CAL_NDATA0_0M	0 to 3.3V		48	Unused, TEM Gnd	0V	
14	CAL_NDATA1_0P	0 to 3.3V		49	3.3V ANALOG (3)	3.3V	
15	CAL_NDATA1_0M	0 to 3.3V		50	CAL_RIGHT_FIRST	0 to 3.3V	
16	CAL_NTREQLE1P	0 to 3.3V		51	CAL_RIGHT_RET	0V	
17	CAL_NTREQLE1M	0 to 3.3V		52	3.3V ANALOG (1)	3.3V	
18	CAL_NTREQHE1P	0 to 3.3V		53	3.3V ANALOG (2)	3.3V	
19	CAL_NTREQHE1M	0 to 3.3V		54	ANA RET (1)	0V	
20	CAL_NDATA0_1P	0 to 3.3V		55	ANA RET (2)	0V	
21	CAL_NDATA0_1M	0 to 3.3V		56	CAL_THERM0P	0 to 3.3V	
22	Spare	N/A		57	CAL_THERM0M	0 to 3.3V	
23	3.3V DIGITAL (3)	3.3V		58	3.3V DIGITAL (1)	3.3V	
24	3.3V DIGITAL (4)	3.3V		59	3.3V DIGITAL (2)	3.3V	
25	Unused, TEM Gnd	0V		60	DIG RET (1)	0V	
26	Unused, TEM Gnd	0V		61	DIG RET (2)	0V	
27	ANA RET (3)	0V		62	CAL_THERM1P	0 to 3.3V	
28	CAL_NDATA1_1P	0 to 3.3V		63	CAL_THERM1M	0 to 3.3V	
29	CAL_NDATA1_1M	0 to 3.3V		64	BIAS RET (1)	0V	
30	CAL_NTREQLE2P	0 to 3.3V		65	BIAS RET (2)	0V	
31	CAL_NTREQLE2M	0 to 3.3V		66	BIAS VOLTAGE (1)	0-100V	
32	CAL_NTREQHE2P	0 to 3.3V		67	BIAS VOLTAGE (2)	0-100V	
33	CAL_NTREQHE2M	0 to 3.3V		68	BIAS VOLTAGE (3)	0-100V	
34	CAL_NDATA0_2P	0 to 3.3V		69	BIAS RET (3)	0V	
35	CAL_NDATA0_2M	0 to 3.3V					

4.1 Appendix B, AFEE Cable Electrical Test Forms

Figure 4-2 – AFEE 69-pin and AFEE Cable 37 Contact Plug Layout

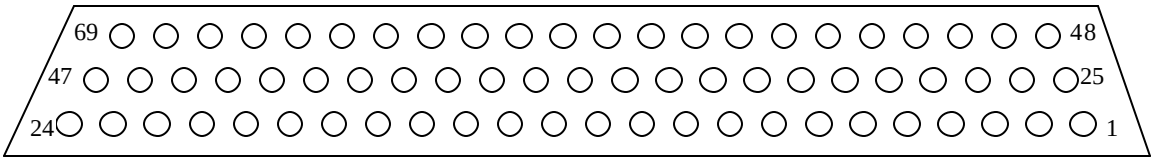

AFEE 69 Contact Plug Mating Face

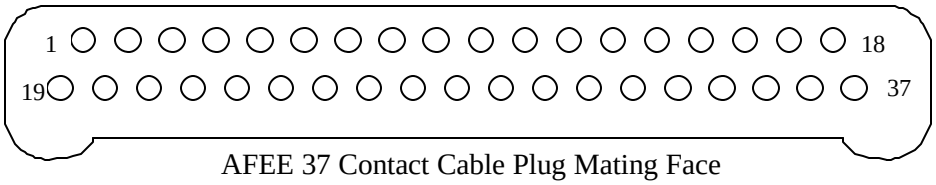

AFEE 37 Contact Cable Plug Mating Face

AFEE J1 to J3 Continunity Test Form

Cable Serial No.

Nanonics AFEE End Conn-Pin	TEM End Conn-Pin	New Signal Definition	Continuity Check
J1-1	#N/A	Unused	
J1-2	J3-36	CAL_NDATA1_2P	
J1-3	J3-37	CAL_NDATA1_2M	
J1-4	J3-14	CAL_NDATA1_0P	
J1-5	J3-15	CAL_NDATA1_0M	
J1-6	J3-16	CAL_NTREQLE1P	
J1-7	J3-17	CAL_NTREQLE1M	
J1-8	#N/A	Unused	
J1-9	J3-40	CAL_NTREQHE3P	
J1-10	J3-41	CAL_NTREQHE3M	
J1-11	J3-42	CAL_NDATA0_3P	
J1-12	J3-43	CAL_NDATA0_3M	
J1-13	J3-20	CAL_NDATA0_1P	
J1-14	J3-21	CAL_NDATA0_1M	
J1-15	J3-44	CAL_NDATA1_3P	
J1-16	J3-45	CAL_NDATA1_3M	
J1-17	J3-46	*** DIG RET (3)**	
J1-18	J3-24	*** 3.3V DIGITAL (4)**	
J1-19	#N/A	Unused	

Nanonics AFEE End Conn-Pin	TEM End Conn-Pin	New Signal Definition	Continuity Check
J1-20	J3-58	3.3V DIGITAL (1)	
J1-21	J3-59	3.3V DIGITAL (2)	
J1-22	J3-60	DIG RET (1)	
J1-23	J3-61	DIG RET (2)	
J1-24	J3-38	CAL_NTREQLE3P	
J1-25	J3-39	CAL_NTREQLE3M	
J1-26	J3-62	CAL_THERM1P	
J1-27	J3-63	CAL_THERM1M	
J1-28	J3-18	CAL_NTREQHE1P	
J1-29	J3-19	CAL_NTREQHE1M	
J1-30	J3-64	BIAS RET (1)	
J1-31	J3-65	BIAS RET (2)	
J1-32	J3-66	BIAS VOLTAGE (1)	
J1-33	J3-67	BIAS VOLTAGE (2)	
J1-34	J3-68	*** BIAS VOLTAGE (3)**	
J1-35	J3-23	*** 3.3V DIGITAL (3)**	
J1-36	J3-69	*** BIAS RET (3)**	
J1-37	J3-47	*** DIG RET (4)**	

AFEE J2 to J3 Continunity Test Form

Cable Serial No.

Nanonics AFEE End Conn-Pin	TEM End Conn-Pin	New Signal Definition	Continuity Check
J2-1	#N/A	Unused	
J2-2	#N/A	Unused	
J2-3	J3-49	*** 3.3V ANALOG (3)**	
J2-4	J3-27	*** ANA RET (3)**	
J2-5	J3-50	CAL_RIGHT_FIRST	
J2-6	J3-51	CAL_RIGHT_RET	
J2-7	J3-28	CAL_NDATA1_1P	
J2-8	J3-29	CAL_NDATA1_1M	
J2-9	J3-52	3.3V ANALOG (1)	
J2-10	J3-53	3.3V ANALOG (2)	
J2-11	J3-8	CAL_NTREQLE0P	
J2-12	J3-9	CAL_NTREQLE0M	
J2-13	J3-54	ANA RET (1)	
J2-14	J3-55	ANA RET (2)	
J2-15	J3-10	CAL_NTREQHE0P	
J2-16	J3-11	CAL_NTREQHE0M	
J2-17	J3-56	CAL_THERM0P	
J2-18	J3-57	CAL_THERM0M	
J2-19	#N/A	Unused	

Nanonics AFEE End Conn-Pin	TEM End Conn-Pin	New Signal Definition	Continuity Check
J2-20	J3-2	CAL_NRESETP	
J2-21	J3-3	CAL_NRESETM	
J2-22	J3-4	CAL_NCMDP	
J2-23	J3-5	CAL_NCMDM	
J2-24	#N/A	Unused	
J2-25	#N/A	Unused	
J2-26	#N/A	Unused	
J2-27	J3-6	CAL_CLKP	
J2-28	J3-7	CAL_CLKM	
J2-29	J3-30	CAL_NTREQLE2P	
J2-30	J3-31	CAL_NTREQLE2M	
J2-31	J3-32	CAL_NTREQHE2P	
J2-32	J3-33	CAL_NTREQHE2M	
J2-33	#N/A	Unused	
J2-34	J3-34	CAL_NDATA0_2P	
J2-35	J3-35	CAL_NDATA0_2M	
J2-36	J3-12	CAL_NDATA0_0P	
J2-37	J3-13	CAL_NDATA0_0M	

4.2 AFEE Unpowered Electrical Test Form

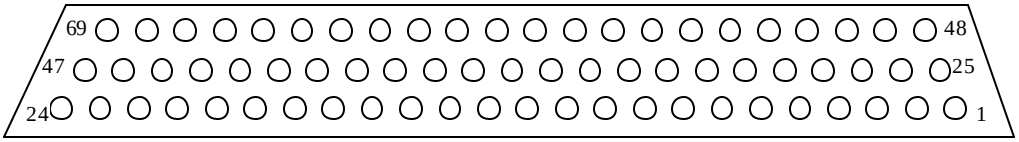

AFEE 69 Contact Plug Mating Face

Figure 4-3 – AFEE 69-pin Contact Layout

AFEE Unpowered Interface Check **AFEE Serial No:**			
Pin Number	**Signal**	**Type**	**Measurement to Gnd**
27	ANA RET (3)	Power	
46	DIG RET (3)	Power	
47	DIG RET (4)	Power	
51	CAL_RIGHT_RET (GND)	Output	
54	ANA RET (1)	Power	
55	ANA RET (2)	Power	
60	DIG RET (1)	Power	
61	DIG RET (2)	Power	

4.3 AFEE Powered Electrical Test Form

Table 4-1 – AFEE Power up Test Points

AFEE Powered Check **AFEE Serial No:**		
Signal	**Measurement Location**	**Measurement**
ANA 3.3 Volts	Across Capacitor C39_15, located between GCFE chips U36_1 and U37_1, near the diode wire solder pads.	
DIG 3.3 Volts	Across capacitor C33_14, located to the right of GCRC U3_1.	
Bias, 0 to +100 Volts	**Between resistors R35_1 and R35_4, located to the right of GCFE chip U35_1. See** Figure 4-4 below .	
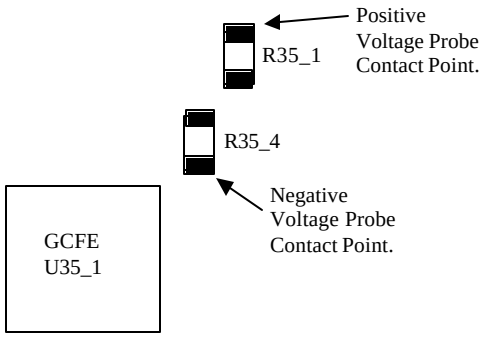
Figure 4-4 – AFEE Bias Voltage Measurement Location