GLAST LAT DESIGN SPECIFICATION	Document # **LAT-TD-00464-03**	Date Effective 20 February 2003
	Prepared by(s) N. Virmani R. Prince	Supersedes Rev 02
	Subsystem/Office Calorimeter Subsystem	
Document Title **GLAST LAT Calorimeter FMEA, RBD, Predictions and CIL**		

Gamma-Ray Large Area Space Telescope
Large Area Telescope Calorimeter

Failure Modes And Effects Analysis (FMEA), Reliability Block Diagrams (RBD), Numerical Reliability Predictions & Critical Item List (CIL)

Prepared by: _____ _____
Nick Virmani Date
CAL Reliability Engineer

Prepared by: _____ _____
Robert Prince Date
Reliability Engineer

Reviewed by: _____ _____
Jim Ampe Date
CAL Lead Electronics Engineer

Reviewed by: _____ _____
Eric Grove Date
CAL Scientist

Reviewed by: _____ _____
Robert Kraeuter Date
CAL Systems Engineer

Approved by: _____ _____
Nick Virmani Date
Systems Assurance Manager

Approved by: _____ _____
Neil Johnson Date
CAL Subsystem Manager

REVISION PAGE

REVISION	DESCRIPTION	DATE	INITIALS
(Rev 01)	Initial CM Release	11 / 27 / 01	
Rev 02		09/25/02	
Rev 03	Corrected fusing, updated parts list	02/20/03	

Table of Contents

1.0 INTRODUCTION 6

1.1 SCOPE 6
1.2 SUMMARY 7
1.2.1 LAT Configuration 7
1.2.2 Summary of the FMEA 7
1.2.3 Summary of CAL Unit Piece-Part Failure Rates and Sources of Information 8
1.2.4 Summary of CAL Unit Piece-Part Failure Rates and Assembly Reliability 9
1.2.5 Summary of CAL Unit Reliability Block Diagrams 13
1.2.6 Summary of the CAL Fusing Trade-Offs Study 13
1.3 CONTENTS OF THIS REPORT 19
1.4 PERFORMANCE OF THE FMEA 19
1.5 CONCLUSIONS AND RECOMMENDATIONS 19

2.0 FMEA AND CIL ANALYSIS METHODOLOGY 19

2.1 GENERAL 19
2.2 ASSUMPTIONS/GROUND RULES 20
2.3 MISSION SUCCESS CRITERIA 20
2.3.1 Mission Success Objectives 20
2.3.2 Reliability (Success Path) Block Diagrams And Allocations 20
2.3.3 Remaining Questions 21

3.0 SEVERITY CATEGORIES FOR THE FMEA 24

4.0 GLAST LAT CALORIMETER FMEA ASSUMPTIONS 24

5.0 GLAST LAT CALORIMETER FMEA BASELINE CONSIDERATIONS AND INFORMATION 25

5.1 FMEA BASELINE CONSIDERATIONS 25
5.2 TREATMENT OF "FAILURE EFFECTS" IN THE FMEA WORKSHEETS FOR THIS ANALYSIS 25

6.0 GLAST LAT CALORIMETER RELIABILITY BLOCK DIAGRAMS AND NUMERICAL RELIABILITY PREDICTIONS 25

6.1 SUMMARY 25
6.2 CALORIMETER FAILURE SCENARIOS 26
6.3 CONTENTS OF APPENDIX D 27
6.4 CONTENTS OF APPENDIX E 27

APPENDIX A 30

APPENDIX A1 31

APPENDIX A2 35

APPENDIX B 41

APPENDIX C 43

APPENDIX D 59

APPENDIX E 65

APPENDIX E1 ..... **66**

APPENDIX E2 ..... **71**

APPENDIX E3 ..... **78**

APPENDIX E4 ..... **85**

APPENDIX E5 ..... **92**

APPENDIX F **99**

1.0 INTRODUCTION

1.1 Scope

A preliminary Failure Modes and Effects Analysis (FMEA), preliminary numerical reliability predictions, and sets of Reliability Block Diagrams (RBD) have been prepared for Calorimeter (CAL) subsystem of the Gamma-Ray Large Area Space Telescope (GLAST) Large Area Telescope (LAT) Observatory. This analysis provides an assessment for the proposed hardware configuration of the Calorimeter (CAL) subsystem, which will be part of the Large Area Telescope (LAT) of GLAST.

The Failure Mode & Effect Analysis (FMEA) analysis provides a "bottoms-up" look at each CAL component in order to identify potential failures and their effects on a local, CAL, and overall LAT system level. Specific attention is given to identification of any Single Point Failures (SPFs) that could cause failure of the GLAST Mission, and to recommend corrective actions or methods to alleviate their occurrence.

The numerical reliability predictions look at individual CAL piece-part and subassembly failure rates and support the numerical aspects of the several RBDs.

Several Reliability Block Diagrams (RBD) have been developed and are contained herein. These RBDs investigate the effects upon reliability for several different realistic scenarios of failed combinations of subassemblies. As well as the RBDs themselves, numerical results are also generated making use of the above preliminary numerical reliability predictions.

This report will answer these questions as each component of the CAL is analyzed.

1. How can the component fail? (It might be possible there is more than mode of failure.)
2. What are the effects of the failure?
3. How critical are the effects?
4. How is the failure detected?
5. What are the safeguards against significant failures?

The Critical Items List (CIL) analysis provides a summary of selected hardware related items whose related failure modes can result in serious injury, loss of life (flight or ground personnel), loss of launch vehicle; or the loss of one or more mission objectives (when no redundancy exists) as defined by the GSFC project office. Specific criteria for hardware being included in the CIL are contained within this report.

This report is intended to be a living document that will be updated again, prior to CDR and possibly at other stages, to reflect changes that are being made throughout CAL development.

The LAT design, including the CAL, although not final, is quite far along. Having made that caveat, please note that while the CAL design is not complete, breadboards of all significant designs are operating and have been balloon-flight and laboratory tested. The critical electrical

portions of the CAL contain several different Application-Specific Integrated Circuits (ASIC) that are replicated in identical form in quantities of several hundreds throughout the CAL. Near-final versions of these devices have been successfully produced and tested. Thus, although this FMEA (and the CAL design) are not final, it is reasonable to expect that this FMEA will remain reasonably accurate far into the CAL design activity. However, it is our intention to update this FMEA as appropriate.

1.2 Summary

1.2.1 LAT Configuration

The LAT contains 16 identical modules (referred to as "towers" due their appearance) that observe and collect science data independently. LAT components other than these 16 towers include the Anti-Coincidence Detector (ACD), a Trigger and Data Flow (T&DF) Subsystem and the LAT Spacecraft Interface Unit (SIU). The functions of these three components are addressed elsewhere.

Each LAT Tower consists of three subsystems. These are the Tracker (TKR), the Calorimeter (CAL) (the subject of this report), and the Tower Electronics Module (TEM).

The GLAST LAT towers are highly modular and, should failures occur, will exhibit a very graceful degradation of capability. As suggested above, the ACD, T&DF and the SIU are at least single-point failure resistant.

Please note that a CAL Unit contains little or no *functional* redundancy (classic "block" redundancy; e.g., two or more parallel assemblies available where not all are required for operation and through some means a good assembly can substitute for a failed assembly). A failed CAL Unit subassembly does cause a loss of some functionality – but the GLAST mission can tolerate the loss and in many cases the loss of numerous subassemblies.

The 16 identical CAL subsystem units of the complete LAT Calorimeter are independent of each other in all respects other than the Towers being assembled into a modular instrument. The 16 CAL subsystem units are operationally, functionally, and electrically independent. Other than by mechanical structure and by scientific purpose, the CAL subsystem units are linked only at the LAT Instrument by the T&DF subsystem. The T&DF subsystem provides distribution of CAL commands from the spacecraft and merging of CAL data to the spacecraft.

There are no electrical failures possible in a CAL subsystem that could in any manner harm any of the other CAL subsystems of the Calorimeter.

1.2.2 Summary of the FMEA

The FMEA examined only the Calorimeter (CAL) subsystem of any one tower of the LAT. The other LAT subsystems such as the ACD, TKR, TEM, T&DF, and the SIU were not investigated.

The intention of the FMEA was to treat the CAL as one of 16 CAL subsystems in the entire LAT: the effect of a failure in one CAL was assumed to be upon the complete LAT, eg, upon

the functioning of all 16 CAL subsystems. It turns out that when an FMEA is performed using the required GSFC Severity Categories, due to the deep CAL modularity, only two Categories are applicable to a CAL – 3R (significant failure modes but operational redundancy is available) and 4 (minor failure modes). Although not amenable to presentation in FMEA format, all CAL electrical designs, whether Severity Category 3R or 4 are at least four-deep (mostly 12-deep) per tower. In general, CAL failure modes are many-failure tolerant – four, five, six? It is impossible to determine a single answer because it depends on where the failures are postulated to occur within the hierarchal and modular architecture.

In the present revision of the CAL electrical design, power fusing has been included in the TEM to mitigate power short-circuit failures in the CAL Unit that could otherwise be single-point failures for the entire CAL Unit (one Tower of the 16). This set of single-point failures arose because the various power supplies (also located in the TEM) for a CAL Unit are not redundant.

A single CAL Unit (one of 16 individual CAL Units in the LAT) has no single-point electrical failure modes. An individual CAL Unit does have two-point failure modes. These include power filter components, and termination resistors for several differential signal inputs from the TEM. These items are local to each Analog Front End Electronics (AFEE) Board – thus they are two-point failure modes. The fuses in the TEM also have failure modes that will result in the loss of an AFEE Board. This analysis does not numerically treat these fuse failure modes since they are located in the TEM and budgeted to the TEM. The most likely candidates for these two-point failures are the TEM-located CAL Unit power fuses themselves. There are four identical AFEE Boards per CAL. AFEE Boards contain mostly highly replicated circuit structures but there are a few "overhead" power components, termination resistors, and connectors, etc. on each AFEE Board that are not replicated. A CAL can always successfully operate with one completely failed AFEE Board and may – but not always – operate with two failed AFEE Boards. This depends on the geometrical relationship of the failed and operating AFEE Boards with respect to the CAL CsI crystal log structure. This information is contained within the CAL FMEA Worksheets contained at the end of this report.

Each CAL has an interface unit with T&DF. This unit, the Tower Electronics Module (TEM) is not completely redundant. Thus there are single-point failures with the LAT Tower that can cause loss of the CAL Unit (and therefore the LAT Tower itself). Architecturally, the TEM is not part of the CAL and such TEM failures are not CAL failure modes. (As is normal for FMEAs, all inputs from sources external to the unit being analyzed are assumed to be available and properly functioning.) Some of these TEM failure modes are mentioned on the first sheet of the CAL FMEA Worksheets contained at the end of this report under the failure mode of power, clock, or command input failures to CAL.

1.2.3 Summary of CAL Unit Piece-Part Failure Rates and Sources of Information

This summary is a table of the failure rate information used in these analyses. Throughout this report, failure rates are stated in failures per 10^9 hours, otherwise stated as "FR* 10^{-9}". Failure rates in units of failures per 10^9 hours are abbreviated as "FITs." Thus an item with a failure rate of one failure per 10^{10} hours is equivalently stated as an FR of .1* 10^{-9} or FR = 0.1 FIT.

A major problem in any numerical reliability calculation is obtaining accurate (or at least useful) failure rate data for the parts in use. This is in general an empirical and statistical problem. For many parts the failure rates are so low and so dependent on design application that there is not a large enough relevant sample population to determine a useful result. For many years the standard was MIL-HNBK-217, the latest revision being Rev F, Notice 2. However, since early 1995, MIL-HNBK-217 is no longer being maintained or updated and it is massively obsolete and inaccurate for any device categories that have changed since that date – which means about everything except perhaps simple passive devices such as resistors and capacitors (and even that is questionable, given the rise of surface mount technology). Most important – and critical to any modern application – is the failure rates MIL-HNBK-217 provides for integrated circuits of all sizes and types, especially large devices such as processors, memory, ASIC, FPGA, etc. For such things, 217-based failure rates are absolutely useless – 217 typically gives FRs of 50 FITs for benign applications whereas a more appropriate value might be .001 to .01 FIT (no one seems to know for sure).

Where available, this analysis has used vendor-supplied values for similar mil-spec high-rel parts of the appropriate established reliability class. In all cases where available, the parts selected are Class S or Class D established reliability. Where useful vendor reliability data could not be obtained, for resistors and capacitors the MIL-HNBK-217 Rev F, Notice 2 value was utilized. For other parts, including ASICs, connectors, solder joints to detector cables, thermistors, and fuses, an educated guess was made. The selected value, the source of the guess, and the reason are provided in the summary table on the next two pages - Table 1.2.3-1, CAL Unit Piece-Part Failure Rates and Sources of Information.

1.2.4 Summary of CAL Unit Piece-Part Failure Rates and Assembly Reliability

A set of numerical reliability predictions based upon 100% functionality for a CAL Unit is in Appendix D. Since a CAL Unit, even though highly failure-tolerant and highly *operationally* redundant, is essentially *functionally* non-redundant, for 100% functionality the CAL Unit is single-string. For 100% functionality, its failure rate at any point in its hierarchal structure is a simple series string of all lower level structures; a summation of the failure rates of all lower level structures right down to the piece-part level.

These results are summarized in Figure 1.2.4-1, Calorimeter Unit Summary of Structure, Failure Rates, and Reliability Calculations. This figure presents something of a “worst case” for CAL Unit since it assumes a total simple series string configuration for the CAL Unit reliability model; e.g., 100% functionality (no failures) through the five year lifetime. This figure also presents the dominant failure contributors at each level. Please note, however, that the failure rate contributions of the CAL Unit power fuses located in the TEM, the CsI crystal detector logs themselves, and their wrappings, housing, and mechanical structure is *not* included in this analysis (or anywhere in this report for that matter). The figure is located immediately after Table 1.2.3-1, below.

Table 1.2.3-1
CAL Unit Piece-Part Failure Rates and Sources of Information, Sheet 1 of 2

Part Number	Part Description	Failure Rate, FITs, Per MIL-HDBK-217F, Notice 2	Failure Rate, FITs, Used for these Reliability Analyses	Reason for Different Value, if Different
AFEE BOARD TOP LEVEL PARTS				
CDR31BX472BKUS	Chip Ceramic Cap, 4.7nF, 100V, 10%, Class S, (Kemet)	0.020178	0.020178	MIL-217 for Class S in lieu of Vendor data
M55342K06B100DS	Chip Film Resistor, 100 ohm, 0.1W, 1%, Class S, (Vishay Dale)	0.003772	0.003772	MIL-217 for Class S in lieu of Vendor data
311P18-10S10R	Thermistor, 30Kohm, GSFC Spec, (YSI)	None relevant	1.000000	Arbitrary, per Project
4-1589487-2	Connector, 37 pin Receptacle, (Tyco/Amp/Microdot)	None relevant	1.000000	Arbitrary, per Project
AFEE BOARD LAYER PARTS				
P/N Not Available	GCRC_Ver 5 AFEE Digital ASIC, QFP80-8, (SLAC Custom)	62.372389	0.010000	Educated guess in lieu of SLAC or Vendor data; MIL-217 data useless.
MAX5121AEEE	12 bit D/A Converter, (Maxim)	None relevant	0.068000	Maxim-supplied value.
LM185BYH2.5 (5962-8759406XA)	2.5V Shunt Regulator, TO46-3, (National Semiconductor)	None relevant	0.500000	Vendor Rad Hard data is inconsistent, ranges from 0.10 to 0.79 FIT.
CDR31BX472BKUS	Chip Ceramic Cap, 4.7nF, 100V, 10%, Class S, (Kemet)	0.020178	0.020178	MIL-217 for Class S in lieu of Vendor data
CWR11FH685KC	Chip Tantalum Cap, 6.8uF, 10V, 10%, Class C, (Kemet)	0.001284	0.001284	MIL-217 for Class D in lieu of Vendor data, MIL-217 value questionable since 217 returns the same value for CWR06 caps.
M55342K06B10D0S	Chip Film Resistor, 10 ohm, 0.1W, 1%, Class S, (Vishay Dale)	0.006369	0.006369	MIL-217 for Class S in lieu of Vendor data
M55342K06B200JS	Chip Film Resistor, 200 ohm, 0.1W, 1%, Class S, (Vishay Dale)	0.002162	0.002162	MIL-217 for Class S in lieu of Vendor data
M55342K06B390JS	Chip Film Resistor, 390 ohm, 0.1W, 2%, Class S, (Vishay Dale)	0.002162	0.002162	MIL-217 for Class S in lieu of Vendor data

Table 1.2.3-1, Continued: of CAL Unit Piece-Part Failure Rates and Sources of Information, Sheet 2 of 2

Part Number	Part Description	Failure Rate, FITs, Per MIL-HDBK-217F, Notice 2	Failure Rate, FITs, Used for these Reliability Analyses	Reason for Different Value, if Different
CHANNEL PARTS				
P/N Not Available	Large-Area PIN Detector	None	1.000000	Arbitrary, per Project
P/N Not Available	Small-Area PIN Detector	None	1.000000	Arbitrary, per Project
P/N Not Available	Detector Flex Cable	None	0.100000	Arbitrary, per Project
P/N Not Available	Solder connections, detector cables to AFEE Board	Approx. 50	5.000000	Educated guess in lieu of good data; MIL-217 data useless.
P/N Not Available	GCFE_Ver 7 Front End ASIC, QFP44-5, (SLAC Custom)	33.194690	0.010000	Educated guess in lieu of SLAC or Vendor data; MIL-217 data useless.
MAX145AEUA	12 bit A/D Converter, (Maxim)	None relevant	0.068000	Maxim-supplied value
1210B563K2500NXHTM	Chip Ceramic Cap, 56nF, 250V, 10%, Mil, (Novacap)	3.005611	3.005611	MIL-217 for Mil-Spec in lieu of Vendor data
CDR31BX472BKUS	Chip Ceramic Cap, 4.7nF, 100V, 10%, Class S, (Kemet)	0.020178	0.020178	MIL-217 for Class S in lieu of Vendor data
M55342K06B15E0S	Chip Film Resistor, 15.0Kohm, 0.1W, 1%, Class S, (Vishay Dale)	0.005232	0.005232	MIL-217 for Class S in lieu of Vendor data
M55342K06B499ES	Chip Film Resistor, 499Kohm, 0.1W, 1%, Class S, (Vishay Dale)	0.0006332	0.0006332	MIL-217 for Class S in lieu of Vendor data
H1206CPX506J	Chip Film Resistor, 50Mohm, 0.25W, 5%, Mil, (State of the Art)	0.087211	0.087211	MIL-217 for Mil-Spec in lieu of Vendor data

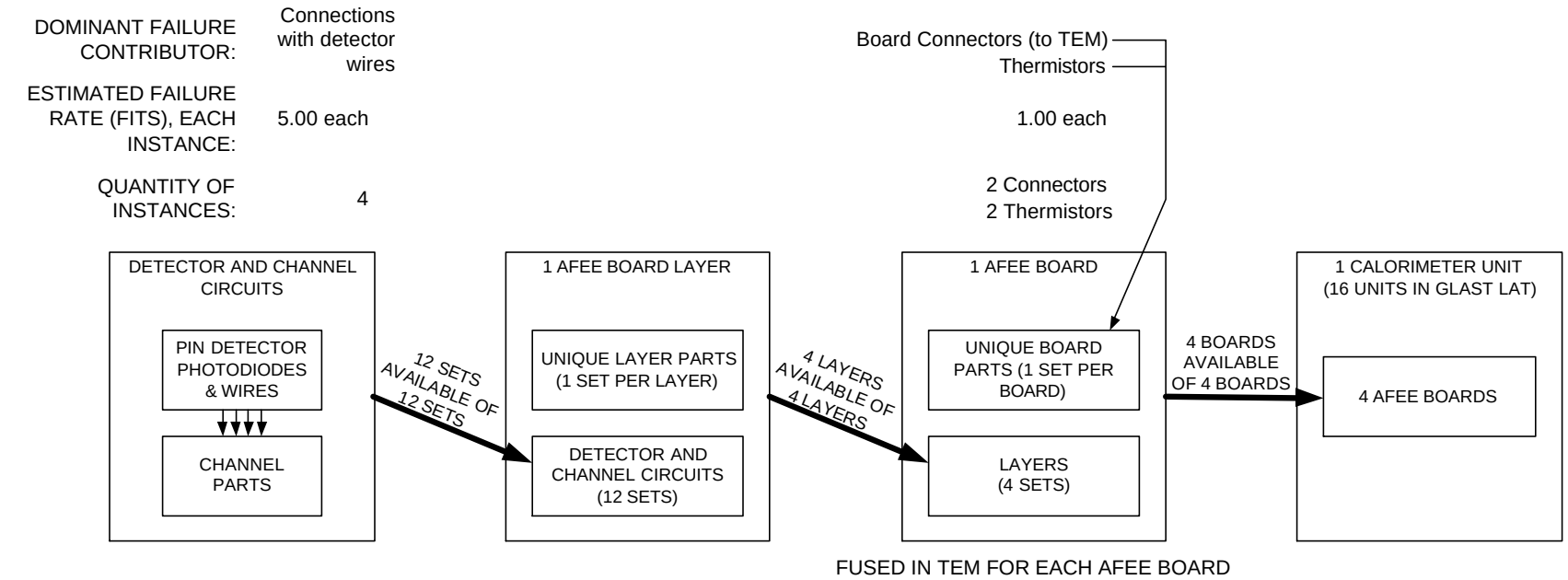

CALCULATED FAILURE RATE (FITS):	28.680	345.542	1386.202	5544.806
CALCULATED RELIABILITY AT 43,800 HOURS (5 YEARS):	.998745	.984979	.941091	.784379

ALL DETECTORS, CHANNELS, LAYERS, AND AFEE BOARDS FULLY FUNCTIONAL.

RELIABILITY CONTRIBUTIONS OF THE CAL POWER FUSES IN THE TEM, THE CsI CRYSTAL LOGS AND THEIR WRAPPINGS, HOUSING, AND MECHANICAL STRUCTURE NOT INCLUDED IN THIS ANALYSIS.

LAST REVISED:
10 FEBRUARY 2003

Figure 1.2.4-1
Calorimeter Unit Summary of Structure, Failure Rates, and Reliability Calculations

1.2.5 Summary of CAL Unit Reliability Block Diagrams

A set of Reliability Block Diagrams (RBD) based upon the preliminary numerical reliability predictions (contained in Appendix D) for one CAL Unit for various subassembly failure models is in sections of Appendix E.

The results presented represent the CAL architecture with CAL Unit power isolation fuses in the TEM that provide CAL Unit power short-circuit protection at the AFEE Board level.

Failure rates in FITs and reliability probability predictions for each model are presented in the Appendix for each structural level at 11 time points each: 0 through 5 years (43,800 hours) at .5 year (4380 hours) intervals.

This summary includes figures that show the failure rates and reliability probability predictions at the end of the five year period for each of the subassembly failure models. Here is a guide to these summary Figures and the CAL Unit conditions they represent:

- Figure 1.2.5-1: All channels (including detectors), layers, and AFEE Boards fully 100% functional. The CAL Unit is fused in the TEM at AFEE Board level.

- Figure 1.2.5-2: Three of the four AFEE Boards are fully functional (including detectors, channel circuits, etc.). The fourth AFEE Board is completely non-functional. The CAL Unit is fused at AFEE Board "Layer" level.

- Figure 1.2.5-3: All four AFEE Boards are partially functional because only three of the four layers per Board are fully functional. On each Board, one of the four layers is completely non-functional. The CAL Unit is fused in the TEM at AFEE Board level.

- Figure 1.2.5-4: All four AFEE Boards each are partially functional. On each Board, all four layers per Board are each partially functional because only 10 of the 12 Channels (including detectors and channel circuits) per layer are fully functional. On each layer of each Board, 2 of the 12 Channels are completely non-functional. The CAL Unit is fused in the TEM at AFEE Board level.

These four figures are the four following pages.

1.2.6 Summary of the CAL Fusing Trade-Offs Study

A Fusing Trade-Offs Study is contained in Appendix F. This study also contains some useful design information regarding the application of fuses to spacecraft and spacecraft instruments. This study was performed to assist in the comparison of CAL Unit isolation fusing at the AFEE Board level versus AFEE Board "layer (synonymous to row)" level.

Other than its impact upon selection of fuse size, there is no clear trade-off between fusing for each detector row ("layer") of each Analog Front End Electronics (AFEE) Board versus fusing for each AFEE Board. Fusing by layer provides a far greater level of power short circuit fault isolation at a cost of 32 fuses per CAL Unit, fusing by AFEE Board provides a lesser level of power short circuit fault isolation at a cost of only 8 fuses per CAL Unit.

Without fusing at some level – at the AFEE Board level is the minimum – there are power filter component single-point failures that can cost an entire CAL Unit. Loss of a CAL Unit results in the loss of the entire LAT Tower. The GLAST mission has defined the loss of one Tower of the 16 as acceptable for the minimum mission. Thus not fusing (or eliminating CAL Unit single-point failures in some manner) leaves the GLAST mission, while not having single-point failures in the CAL Units, with numerous two-point failure modes in the CAL Units.

As a matter of principle, it seems that if fusing is to be done, doing the fusing at the lowest level practical is the approach to take unless there are clear reasons not to fuse at the lowest level.

The more important issues to be faced are how to select fuses and fuse face value. FM08A fuses were used as an example in the study since FM08A units were under consideration for the application. FM08A fuses are *extremely unreliable* unless properly derated and properly 100% screened before acceptance for flight use. Without proper derating FM08A fuses, especially the face value ratings of .5 Amp and less, are virtually *guaranteed* to have in-orbit lives of less than a year. Experience has shown that without proper 100% screening, FM08A fuses have infant mortality failures approaching perhaps 10%. Likewise, proper 100% screening has been shown to reliably eliminate infant mortality failures among the population that survives the screen.

Since we are designing to eliminate power short circuits, the likely culprits for power shorts are tantalum filter capacitors (of there are many in a CAL Unit). The normal failure mode for tantalum capacitors is a hard low-resistance short circuit. Thus we really do not need to select small fuses. In fact, with respect to fuse reliability and derating requirements, it is far better to use the largest fuse face value that can be interrupted by the available current from the power supply. This, then, is the major driver for upper limit for fuse face value – regardless of what level in the CAL Unit design the fuses are applied.

The lower limit for fuse face value depends upon the fuse useful current rating that results from derating compared the expected current loads at the points in the CAL Unit where fusing is being considered.

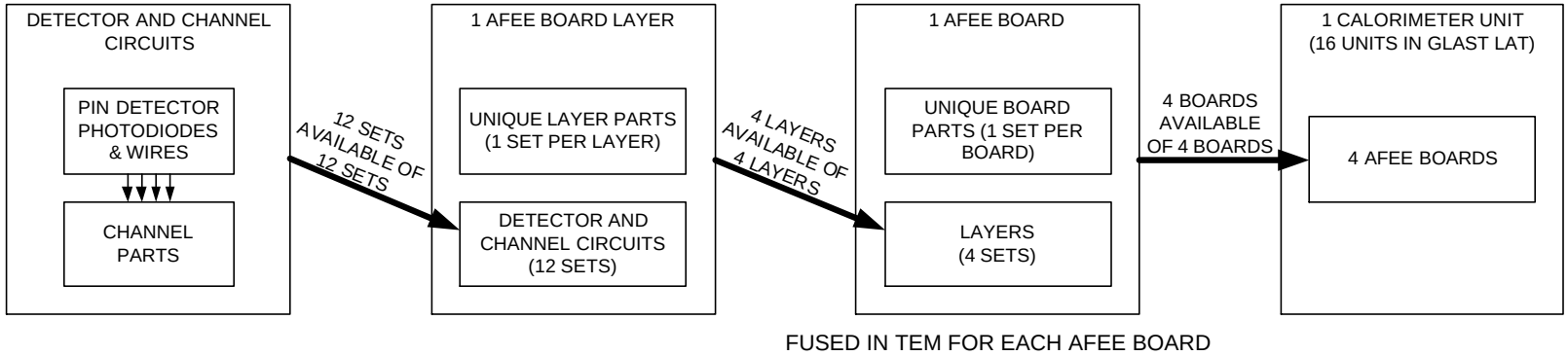

CALCULATED FAILURE RATE (FITS):	28.680	345.542	1386.202	5544.806
CALCULATED RELIABILITY AT 43,800 HOURS (5 YEARS):	.998745	.984979	.941091	.784379

ALL DETECTORS, CHANNELS, LAYERS, AND AFEE BOARDS FULLY FUNCTIONAL.

RELIABILITY CONTRIBUTIONS OF THE CAL POWER FUSES IN THE TEM, THE CsI CRYSTAL LOGS AND THEIR WRAPPINGS, HOUSING, AND MECHANICAL STRUCTURE NOT INCLUDED IN THIS ANALYSIS.

LAST REVISED:
10 FEBRUARY 2003

Figure 1.2.5-1
Summary of CAL Unit RBD – CAL Unit 100% Functional
CAL Unit Fused at "Layer" Level

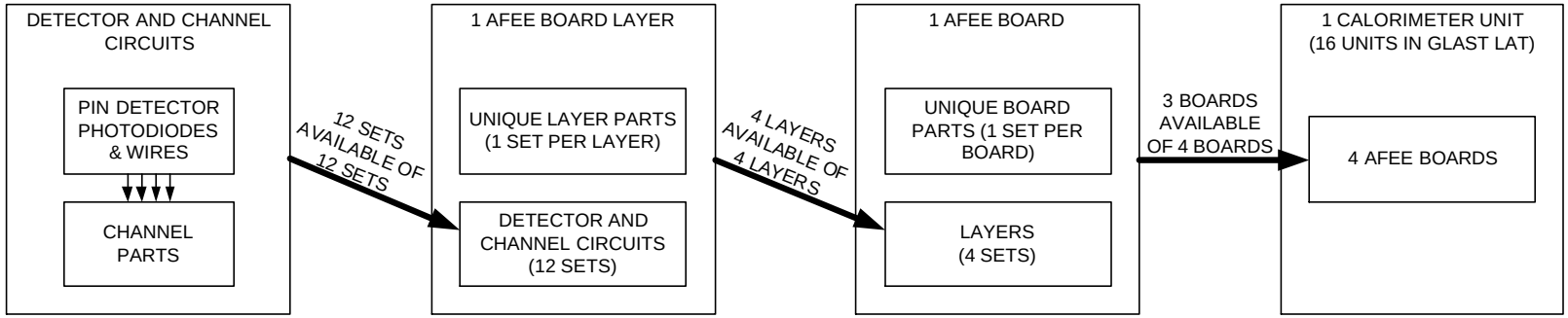

FUSED IN TEM FOR EACH AFEE BOARD

CALCULATED FAILURE RATE (FITS):	28.680	345.542	1386.202	832.750
CALCULATED RELIABILITY AT 43,800 HOURS (5 YEARS):	.998745	.984979	.941091	.980778

ALL DETECTORS, CHANNELS, LAYERS, AND AFEE BOARDS FULLY FUNCTIONAL.

RELIABILITY CONTRIBUTIONS OF THE CAL POWER FUSES IN THE TEM, THE CsI CRYSTAL LOGS AND THEIR WRAPPINGS, HOUSING, AND MECHANICAL STRUCTURE NOT INCLUDED IN THIS ANALYSIS.

LAST REVISED:
10 FEBRUARY 2003

Figure 1.2.5-2
Summary of CAL Unit RBD – 3 of 4 CAL Unit AFEE Boards 100% Functional
CAL Unit Fused at "Layer" Level

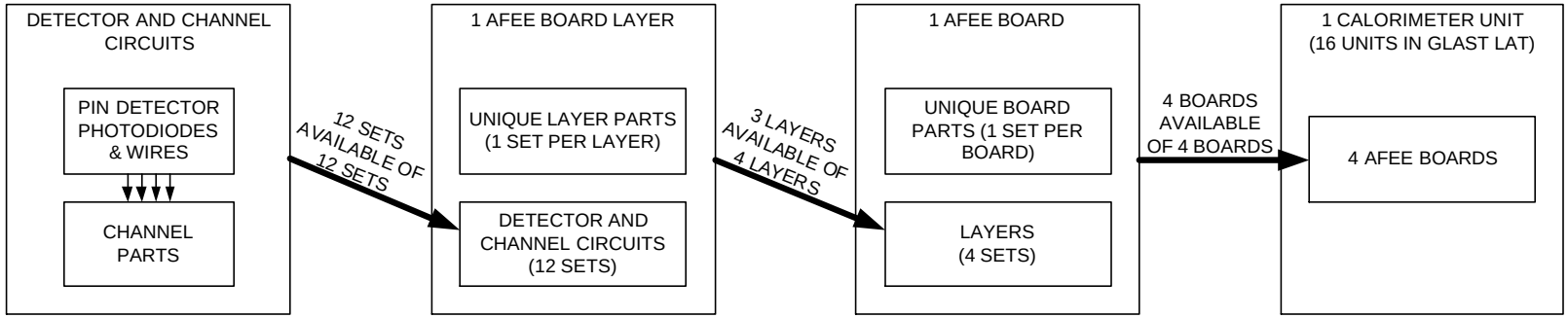

FUSED IN TEM FOR EACH AFEE BOARD

CALCULATED FAILURE RATE (FITS):	28.680	345.542	63.633	354.530
CALCULATED RELIABILITY AT 43,800 HOURS (5 YEARS):	.998745	.984979	.998497	.994001

ALL DETECTORS, CHANNELS, LAYERS, AND AFEE BOARDS FULLY FUNCTIONAL.

RELIABILITY CONTRIBUTIONS OF THE CAL POWER FUSES IN THE TEM, THE CsI CRYSTAL LOGS AND THEIR WRAPPINGS, HOUSING, AND MECHANICAL STRUCTURE NOT INCLUDED IN THIS ANALYSIS.

LAST REVISED:
10 FEBRUARY 2003

Figure 1.2.5-3
Summary of CAL Unit RBD – 3 of 4 CAL Unit AFEE Board Layers 100% Functional
CAL Unit Fused at "Layer" Level

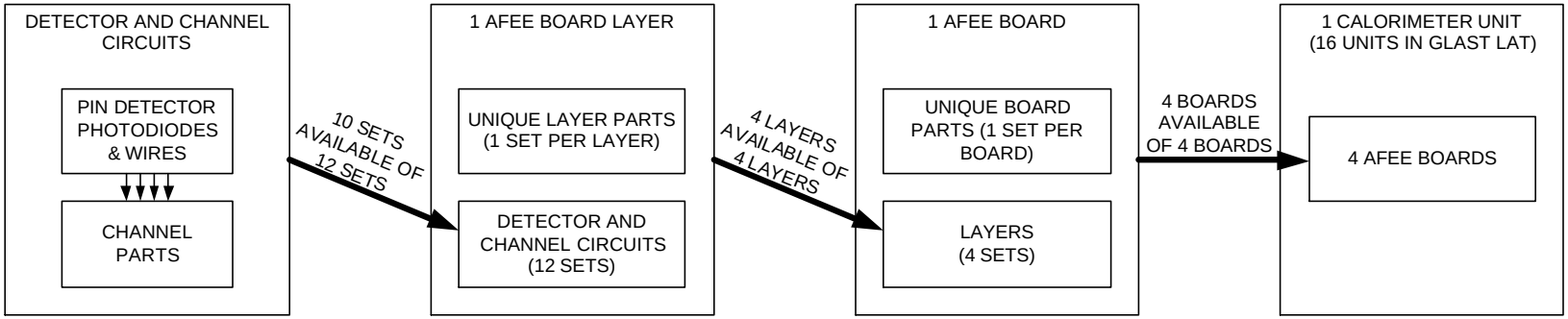

FUSED IN TEM FOR EACH AFEE BOARD

CALCULATED FAILURE RATE (FITS):	28.680	1.407	9.662	38.649
CALCULATED RELIABILITY AT 43,800 HOURS (5 YEARS):	.998745	.999939	.999580	.998322

ALL DETECTORS, CHANNELS, LAYERS, AND AFEE BOARDS FULLY FUNCTIONAL.

RELIABILITY CONTRIBUTIONS OF THE CAL POWER FUSES IN THE TEM, THE CsI CRYSTAL LOGS AND THEIR WRAPPINGS, HOUSING, AND MECHANICAL STRUCTURE NOT INCLUDED IN THIS ANALYSIS.

LAST REVISED:
10 FEBRUARY 2003

Figure 1.2.5-4
Summary of CAL Unit RBD – 10 of 12 CAL Unit Detectors and Channels per AFEE Board Layer 100% Functional CAL Unit Fused at "Layer" Level

1.3 Contents of this Report

Following these explanatory sections, there are sets of back-up material in Appendices.

- An eight-sheet Block Diagram of a CAL Unit is provided as Appendix A. This block diagram is separated into two groups as Appendix A1 and Appendix A2. These groups are as follows:
  - Appendix A1, three sheets, starts on the first sheet at the very top level by showing the overall GLAST Observatory and breaking out the Calorimeter portion one LAT "Tower" for deeper illustration. The fuses are also shown.
  - Appendix A2, five sheets, shows the CAL Unit down through the CAL architecture hierarchy to the contents of one "layer" of one AFEE Board.
- Appendix B is a page that outlines and provides a numerical structure for the CAL design. The FMEA Worksheets in Appendix C are organized around this structure.
- Appendix C contains the FMEA Worksheets.
- Appendix D is the CAL Unit piece-parts failure rates and assembly numerical reliability prediction for the hierarchal structure of one CAL Unit based upon 100% functionality.
- Appendix E in its various sections contains RBDs based upon the preliminary numerical reliability predictions (contained in Appendix D) for one CAL Unit for various subassembly failure models.
- Appendix F is the Fusing Trade-Offs Study. This study also contains some useful design information regarding the application of fuses to spacecraft and spacecraft instruments.

1.4 Performance of the FMEA

This FMEA was performed to the extent possible in accordance with the GSFC Flight Assurance document P-302-720, "Performing a Failure Mode and Effects Analysis." This FMEA was performed upon the CAL design that provides power fusing for each layer of each AFEE Board.

1.5 Conclusions And Recommendations

No hardware items with severity classifications of 2 or higher have been identified that require placement on a Critical Items List (CIL). However, a few items (2R Severity Classification) have been identified where failure of redundant hardware could potentially result in the loss of one or more mission objectives as defined by the GSFC project office. A summary of these items is provided in the FMEA Worksheets.

2.0 FMEA AND CIL ANALYSIS METHODOLOGY

2.1 General

This functional FMEA and CIL Analysis is conducted in accordance with GSFC specification S-302-89-01, February 1990, "Procedures for Performing a Failure Mode and Effects Analysis

(FMEA)" and GLAST LAT procedure LAT-MD-00039-1, "Performance Assurance Implementation Plan".

The specific process used to perform this analysis is provided below.

2.2 Assumptions/Ground Rules

In order to perform the FMEA, the following assumptions/ground rules are made:

- Failure modes will be assessed at the component interface level.
- Each failure mode will be assessed for the effect at that level of analysis, the next higher level and upward
- A failure mode will be assigned a severity category based on the most severe effect caused by a failure
- Redundancies will be analyzed to ensure that redundant paths are isolated or protected such that any single point failure that causes the loss of a functional path will not affect the other functional path(s) or the capability to switch operation to that redundant path.
- All failures with a severity classification of 2 or higher shall be placed on a Critical Item List (CIL)
- All inputs to the item being analyzed are present and at nominal values
- Temperatures are within specified limits
- Nominal power is available

2.3 Mission Success Criteria

The mission success criteria section is broken out into three sub-sections: Mission Success Objectives, Reliability (Success Path) Block Diagrams and Allocations, and Refinement of Questions required for CDR. The criteria presented in this section are essential for making determinations regarding failure effects and severity classification definition.

2.3.1 Mission Success Objectives

The mission success objectives, used for purposes of this FMEA report and analysis, are provided herein.

2.3.2 Reliability (Success Path) Block Diagrams And Allocations

A top-level flow down of reliability allocations from the spacecraft to the LAT to the CAL, which was provided by SLAC, is provided below in Figure 2.3.2-1. Given the hierarchal replicated structure of the Cal, there are numerous combinations of failures at various levels that will still result in an operational CAL. A diagram showing two possible approaches and model for levels of redundancy in the CAL is provided in Figure 2.3.2-2 (A & B). Figure 2.3.2-2 (A) shows a configuration that accepts operation with 3 of 4 AFEE Boards. Figure 2.3.2-2 (B) panel assumes 10 of 12 channel circuits in each AFEE layer to be functional.

2.3.3 Remaining Questions

In preparation for CDR, the CAL/LAT team will need to define the effect that Calorimeter losses have on the overall mission success objectives.

For this particular FMEA, more than two Calorimeter failures are considered a loss of mission objectives. However, the extent to which degraded performance is allowed before mission objectives are considered lost has not been adequately defined.

At the level of the complete Calorimeter, we assume that successful operation can be obtained with any 15 of the 16 CAL Units operational.

Reliability Allocation

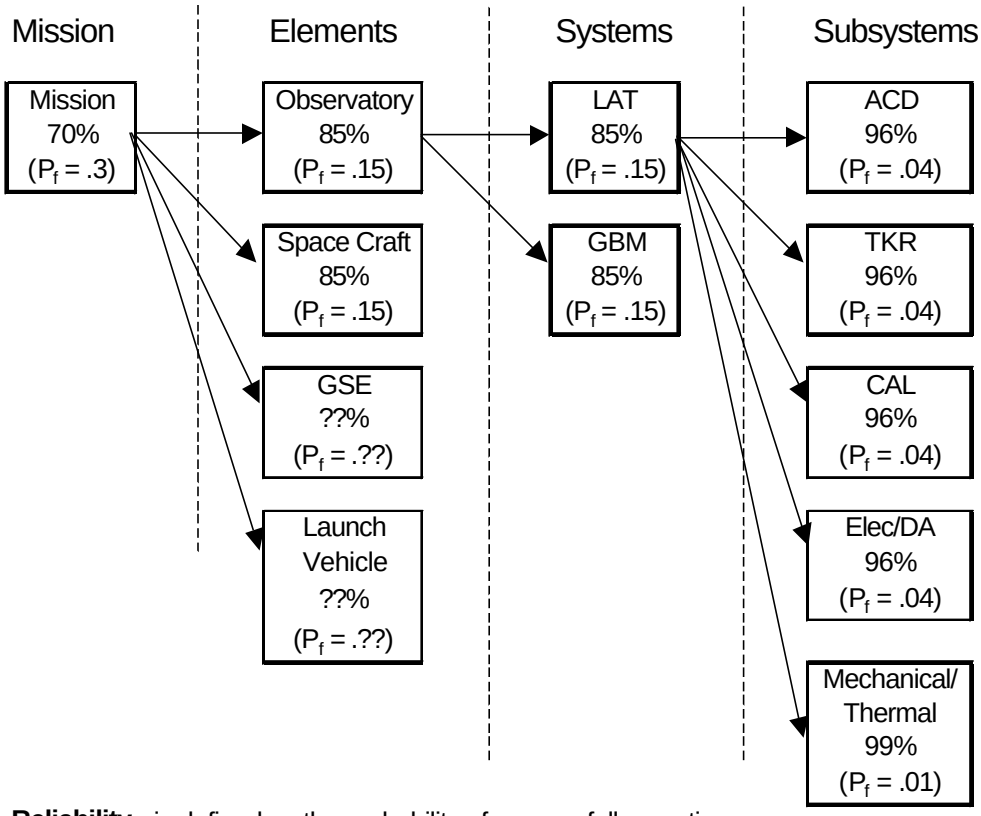

Reliability - is defined as the probability of successfully meeting mission objectives at end of life. P_f is probability of failure.

Figure 2.3.2-1 SLAC GLAST Reliability Allocation Flow Down

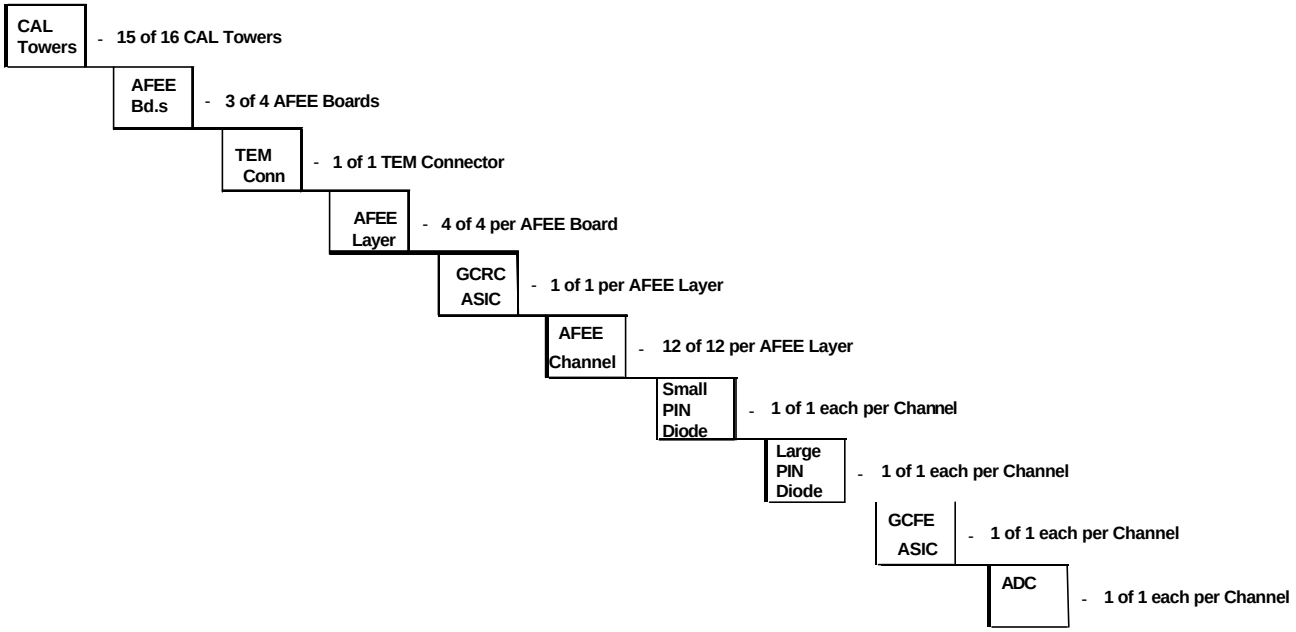

Figure 2.3.2-2(A) CAL Redundancy Configuration
15 of 16 CAL Towers
3 of 4 AFEE Boards

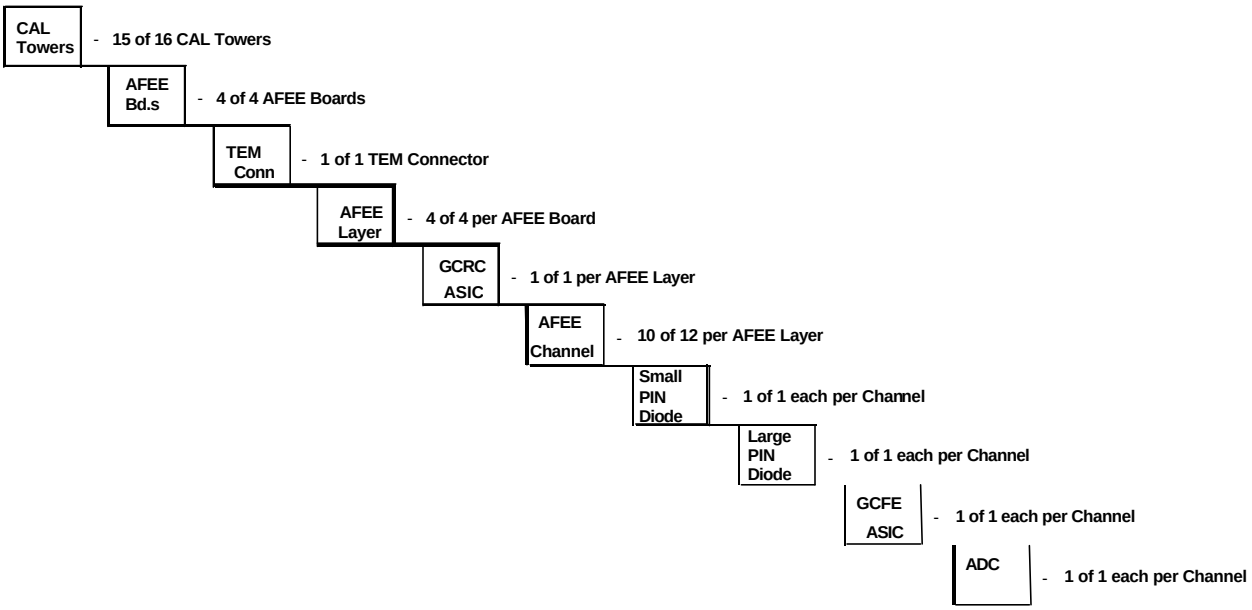

Figure 2.3.2-2(B) CAL Redundancy Configuration
15 of 16 CAL Towers
10 of 12 Detection Channels per Layer

3.0 SEVERITY CATEGORIES FOR THE FMEA

The Severity Categories in use for this FMEA are listed below. These Categories are extracted from in GSFC document P-302-720 and have been slightly modified for the purposes of this FMEA. These modifications are indicated by *italics*.

- Category 1 – Catastrophic Failure modes that could result in serious injury or loss of life, or damage to the launch vehicle, *the GLAST spacecraft, or the Calorimeter of the GLAST LAT instrument*.
- Category 1R – Failure modes of identical or equivalent redundant hardware items that, if all failed, could result in Category 1 effects.
- *Category 1S – Failure in a safety or hazard monitoring system that could cause the system to fail to detect a hazardous condition or fail to operate during such a condition and lead to Severity Category 1 consequences.*
- Category 2 – Critical Failure modes that could result in loss of one or more *GLAST LAT* mission objectives as defined by the GSFC project office *or GLAST LAT personnel*.
- Category 2R – Failure modes of identical or equivalent redundant hardware items that could result in Category 2 effects if all failed.
- Category 3 – Significant Failure modes that could cause degradation to *GLAST LAT* mission objectives.
- *Category 3R – Failure modes of identical or equivalent redundant hardware items that could result in Category 3 effects if all failed.*
- Category 4 – Minor Failure modes that could result in insignificant or no loss to *GLAST LAT* mission objectives.

4.0 GLAST LAT CALORIMETER FMEA ASSUMPTIONS

(ADAPTED FROM GSFC P-302-720 AND GSFC S-302-89-01)

- Only one failure exists at a time.
- All inputs (including software commands) to the item being analyzed are present and at nominal values. Such inputs include but are not limited to:
    - AVDD and DVDD power from the TEM.
    - PIN Photodiode Bias Power from the TEM.
    - AFEE ID Jumper connection in the TEM.
    - Reset signal from the TEM.
    - Command signals from the TEM.
    - Clock signals from the TEM.
- Nominal power is available (except when the availability of power is part of the failure(s) being considered.
- Only the on-orbit phase of the mission is analyzed.
- Connector failures are not treated. (However, connector and detector wiring estimated failure rates were treated in the failure predictions and RBDs.)
- No launch vehicle spacecraft considerations or failures are treated.

5.0 GLAST LAT CALORIMETER FMEA BASELINE CONSIDERATIONS AND INFORMATION

5.1 FMEA Baseline Considerations

- This FMEA was conducted using a near-final electrical design for the Calorimeter using the "layer" fused option. Calorimeter breadboards have shown the basic validity of the present designs. The intention is to keep this FMEA up to date as changes occur.
- This FMEA was conducted at the first level below the Calorimeter Analog Front End Electronics (AFEE) Circuit Board level; eg, at the Cal "mid-level" functional level. That level is usually an identifiable small grouping of AFEE piece-parts or parts that interface with an AFEE.
- When reviewing cross-strapping interfaces, schematics and detailed designs to the extent available were utilized for the analysis.

5.2 Treatment of "Failure Effects" in the FMEA Worksheets for this Analysis

In the worksheets for this FMEA, the Severity Category of failure modes of items or functions with redundancy is identified with an "R" modifier with the assigned failure Severity Category.

In the worksheets, the "Failure Effects" column gives the effects of the failure <u>as if there were no redundancy or mitigation available</u>. Without redundancy, the failure will have the Failure Effects indicated, although in the "Remarks" there may be some work-arounds or other compensations to mitigate some of the worst effects. However, such mitigations would be very much a "last resort" and not intended as a form of redundancy. With redundancy (an "R" modifier to the assigned failure Severity Category), the Failure Effects indicated also give the results of the failure <u>as if there was no redundancy available</u>. The redundancy that is available will be described in the "Compensating Features/Action" portion of the "Remarks" column. The application of the available redundancy negates the effect of the actual failure and means that the indicated "Failure Effects" do not occur. The original failure is the "one failure" upon which this FMEA is predicated. If the redundant function were then to fail (a second failure), the indicated "Failure Effects" would be observed (excepting the situation where there are many parallel channels). In that case, multiple failures could be tolerated – a slow, hopefully graceful, degradation would occur.

6.0 GLAST LAT CALORIMETER RELIABILITY BLOCK DIAGRAMS AND NUMERICAL RELIABILITY PREDICTIONS

6.1 Summary

A Reliability Block Diagram (RBD) and an associated reliability prediction model were prepared using Relex® reliability analysis software. The sources of the information and the results were documented in the Summary of this report.

Using the RBD model and the parts failure rate estimates, Calorimeter reliability predictions were prepared for three Calorimeter failure scenarios. The results of these analyses are presented in Table 6.1-1. This table presents estimates of the probabilities of successful operation of one Calorimeter Unit at 5 years (43,800 hours) for the various failure scenarios. The details of the RBDs and parts failure rates are presented in the various sections of Appendices D and E. References to appropriate sections of Appendix E are also presented in the table.

The RBD model reflects the hierarchal and replicated structure of the Calorimeter Unit electrical design. Being an hierarchal model, the failure scenarios investigated are of necessity structurally parallel to the Calorimeter model and generate rather uniform failure distributions.

6.2 Calorimeter Failure Scenarios

Preliminary reliability predictions were prepared for three Calorimeter failure scenarios. The scenarios were created by adjusting the basic Calorimeter RBD model to reflect the desired failure conditions.

The basic RBD model treats the hierarchal and replicated Calorimeter structure as a completely series string of blocks; ie, there is no operational redundancy whatsoever with respect to 100% functionality. The reliability prediction from this basic model is predicated upon the assumption that all detector channels are required for successful Calorimeter science operations.

Based upon the available Calorimeter reliability and operability requirements and conversations with cognizant personnel, a set of reasonable failure scenarios that would still permit successful Calorimeter science operations was developed. It was then a simple matter to create versions of the basic non-redundant RBD that were modified to reflect the postulated parallel redundancies (with respect to minimum mission requirements) and associated failure modes.

As mentioned earlier, the Calorimeter was modeled as an hierarchy of replicated structures. The top level of the modeled hierarchy is one Calorimeter Unit. In actuality, the top level of the entire GLAST LAT Calorimeter consists of 16 CAL Units. (Each of these 16 Units is the "Calorimeter Subsystem" of one LAT Tower.) The second level of the hierarchy is one CAL Unit and from there on down, the hierarchy contains four AFEE Boards, AFEE Board Layers, etc. For modeling and computational practicality, these analyses do not consider the entire Calorimeter – the top level for these analyses is one CAL Unit.

Four operational levels including three failure scenarios were investigated at the CAL Unit level. For all these cases, the CAL Unit is fused in the TEM at AFEE Board level. These scenarios are:

- No failures; eg, 100% functionality.
- 3 of the 4 AFEE Boards each 100% functional, 1 of the 4 AFEE Boards completely non-functional for all 4 layers. We are aware that while a CAL Unit can always operate with one failed AFEE Board, successful operation in the presence of two failed AFEE Boards requires that the failed Boards be adjacent so that data are available from at least one end of CsI logs of both orthogonal directions.

- 4 of the 4 AFEE Boards each partially functional because each AFEE Board contains 3 completely functional layers and 1 non-functional layer.
- 4 of the 4 AFEE Boards each partially functional because each AFEE Board and each Board Layer contains failed Detector Channels at the rate of 10 good, 2 bad Detector Channels per AFEE Board Layer. Since each AFEE Board contains 4 Layers of 12 Detector Channels per Layer, this failure scenario models each AFEE Board with 40 operating and 8 failed Detector Channels, all uniformly distributed.

6.3 Contents of Appendix D

Appendix D is the preliminary numerical reliability prediction for the hierarchal structure of one CAL Unit based upon 100% functionality.

This is a set of Relex-generated printouts. These printouts contain the failure rate data generated by Relex from the various failure rate sources we utilized. These were discussed in the Summary in Section 1.2.4. It is this data that Relex used to generate the numerical reliability predictions. Although it is not the purpose of this printout to illustrate the CAL Unit basic RBD model, the ordering of the parts listing in this printout does so reflect that model

6.4 Contents of Appendix E

Appendix E in its various sections contains RBDs based upon the preliminary numerical reliability predictions (contained in Appendix D) for one CAL Unit for various subassembly failure models. For all cases, the CAL Unit is fused in the TEM at AFEE Board level.

Appendix E contains the details of the RBD model and the CAL Unit reliability predictions resulting from the 100% functional case and the three failure scenarios. Here is a brief description of the contents of each section of Appendix E:

- Appendix E1: This is a set of 4 figures that summarize the numerical predictions for the 100% functional case and each of the three failure scenarios, one sheet per scenario. Each sheet contains a set of predictions of both probability of success R(T) and the accompanying predicted failure rate in FITs for mission time T = 0 years through T = 5 years. The data sets in these figures are provided at the CAL Unit level, the AFEE Board level, the Board Layer level, and for one Channel. (The data for an individual Channel is unchanging for all models since we have not postulated any failure scenarios at a level within the Channel. The individual Channel reliability (R(T)) values are not detailed in the actual Relex printouts provided in Appendices E2 through E5. For this summary, those Channel R(T) values were calculated from the conventional "$e^{-?t}$" formula since the Channel failure rate is available from Relex.)
- Appendices E2 through E5 are sets of Relex-generated printouts. These printouts contain the graphical representation and the numerical prediction data for the RBD model under consideration. The scenario represented in this Appendix sections are:
    - Appendix E2: CAL Unit has no failures; eg, 100% functionality.
    - Appendix E3: CAL Unit has 3 of the 4 AFEE Boards each 100% functional and 1 of the 4 AFEE Boards completely non-functional for all 4 layers.

- Appendix E4: CAL Unit has 4 of the 4 AFEE Boards each partially functional because each AFEE Board contains 3 completely functional layers and 1 non-functional layer.
- Appendix E5: CAL Unit has 4 of the 4 AFEE Boards each partially functional because each AFEE Board and each Board Layer contains failed Channels at the rate of 10 good, 2 bad Channels per AFEE Board Layer.

Table 6.1-1
Summary, Reliability Predictions for a GLAST Calorimeter Unit

FAILURE SCENARIO FOR CALORIMETER UNIT (Fused at AFEE Board Level in TEM)			R(T) AT T=5 YEARS	APPENDIX E REFERENCE
AFEE BOARDS/CAL UNIT THAT ARE FUNCTIONAL	AFEE BOARD LAYERS/AFEE BOARD THAT ARE FUNCTIONAL	DETECTOR CIRCUITS/AFEE BOARD LAYER THAT ARE FUNCTIONAL		
4 OF 4,100%	4 OF 4, 100%	12 OF 12, 100%	0.784379	E-1, SHEET 1 & E-2
3 OF 4,100%	4 OF 4, 100%	12 OF 12, 100%	0.980778	E-1, SHEET 2 & E-3
4 OF 4, PARTIAL	3 OF 4, 100%	12 OF 12, 100%	0.994001	E-1, SHEET 3 & E-4
4 OF 4, PARTIAL	4 OF 4, PARTIAL	10 OF 12, 100%	0.998322	E-1, SHEET 4 & E-5

APPENDIX A

GLAST LARGE AREA TELESCOPE
BLOCK DIAGRAM

CALORIMETER DESIGN

APPENDIX A1

CALORIMETER DESIGN TOP-LEVEL ARCHITECTURE

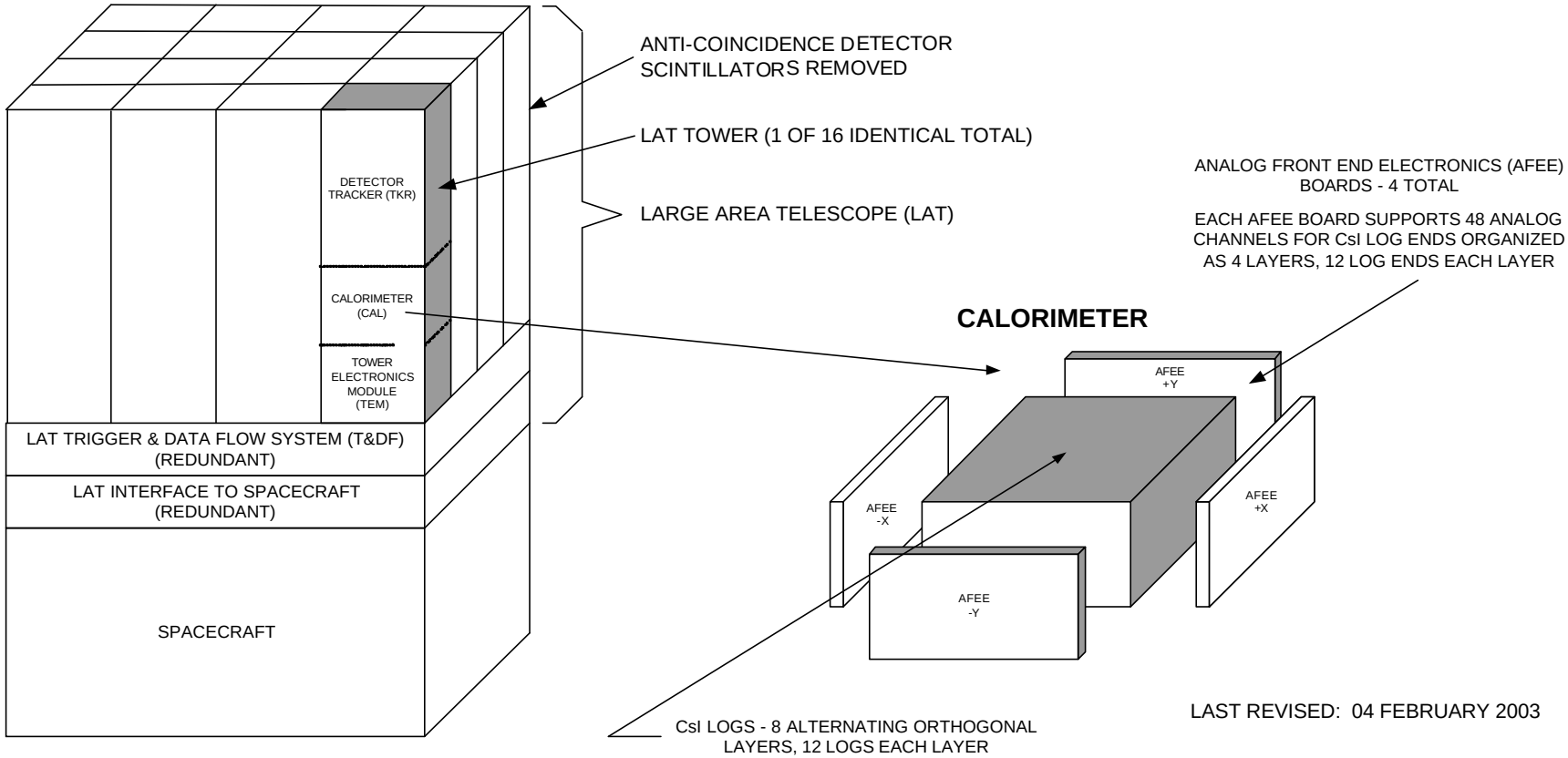

LAST REVISED: 04 FEBRUARY 2003

GLAST

GLAST LARGE AREA TELESCOPE

CALORIMETER BLOCK DIAGRAM

OVERVIEW OF ARCHITECTURE

SHEET 1 OF 8

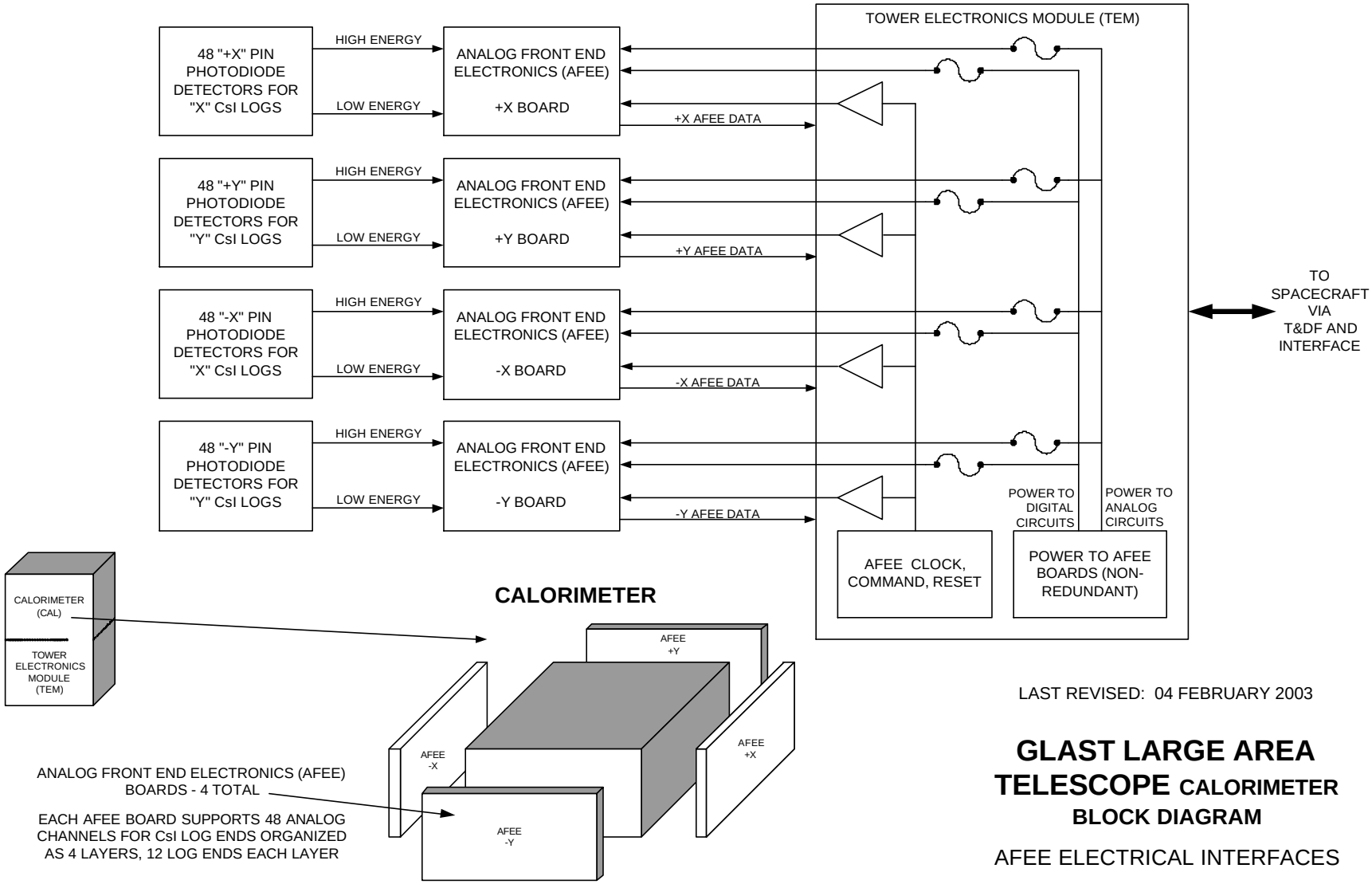

LAST REVISED: 04 FEBRUARY 2003

GLAST LARGE AREA TELESCOPE CALORIMETER
BLOCK DIAGRAM

AFEE ELECTRICAL INTERFACES

SHEET 2 OF 8

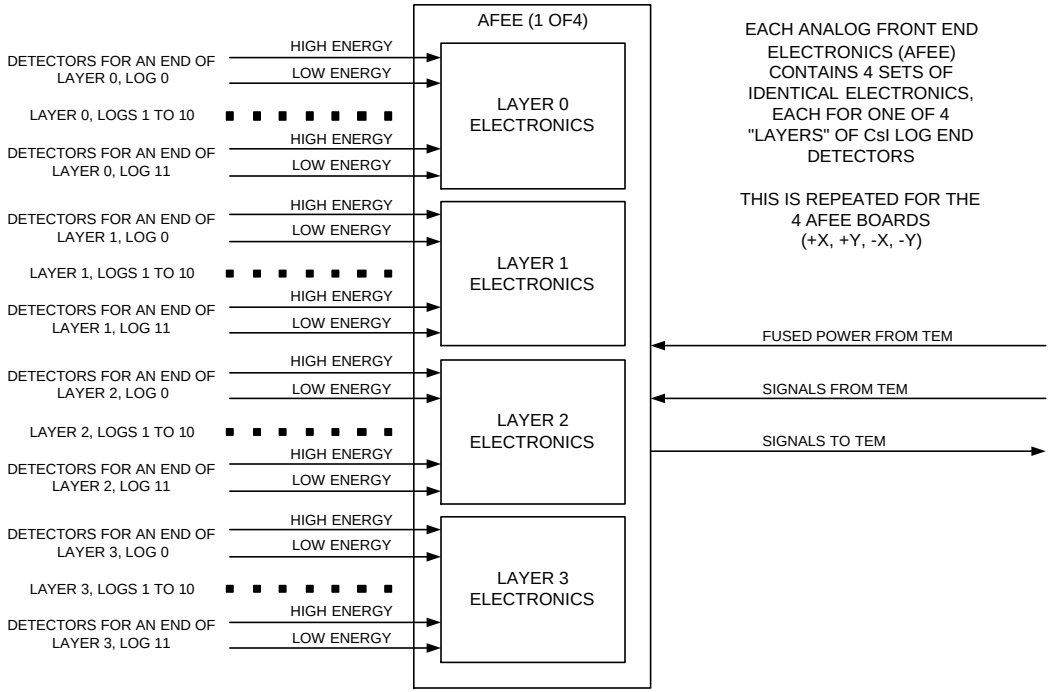

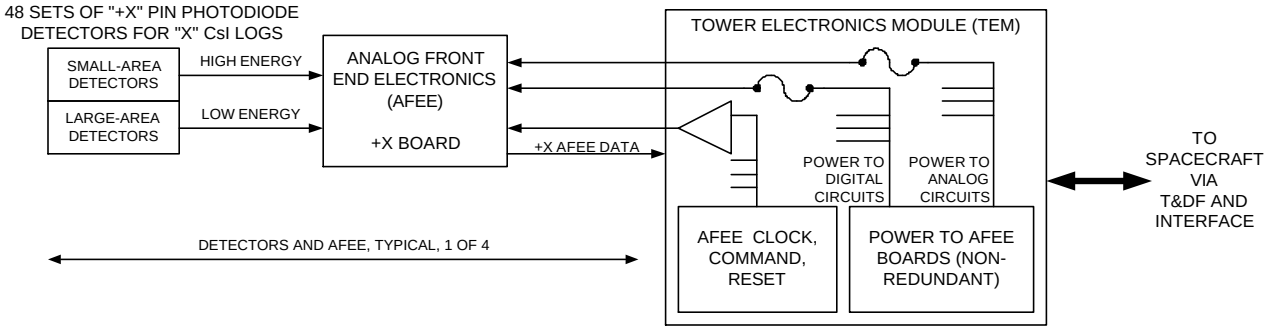

LAST REVISED: 04 FEBRUARY 2003

GLAST LARGE AREA TELESCOPE

CALORIMETER BLOCK DIAGRAM

AFEE
ELECTRICAL OVERVIEW

SHEET 3 OF 8

APPENDIX A2

CALORIMETER DESIGN LAYER-LEVEL
ARCHITECTURE

FUSED AT AFEE BOARD LEVEL IN TEM
ALSO
COMMAND CIRCUIT STRUCTURE
DATA AND TRIGGER CIRCUIT STRUCTURE

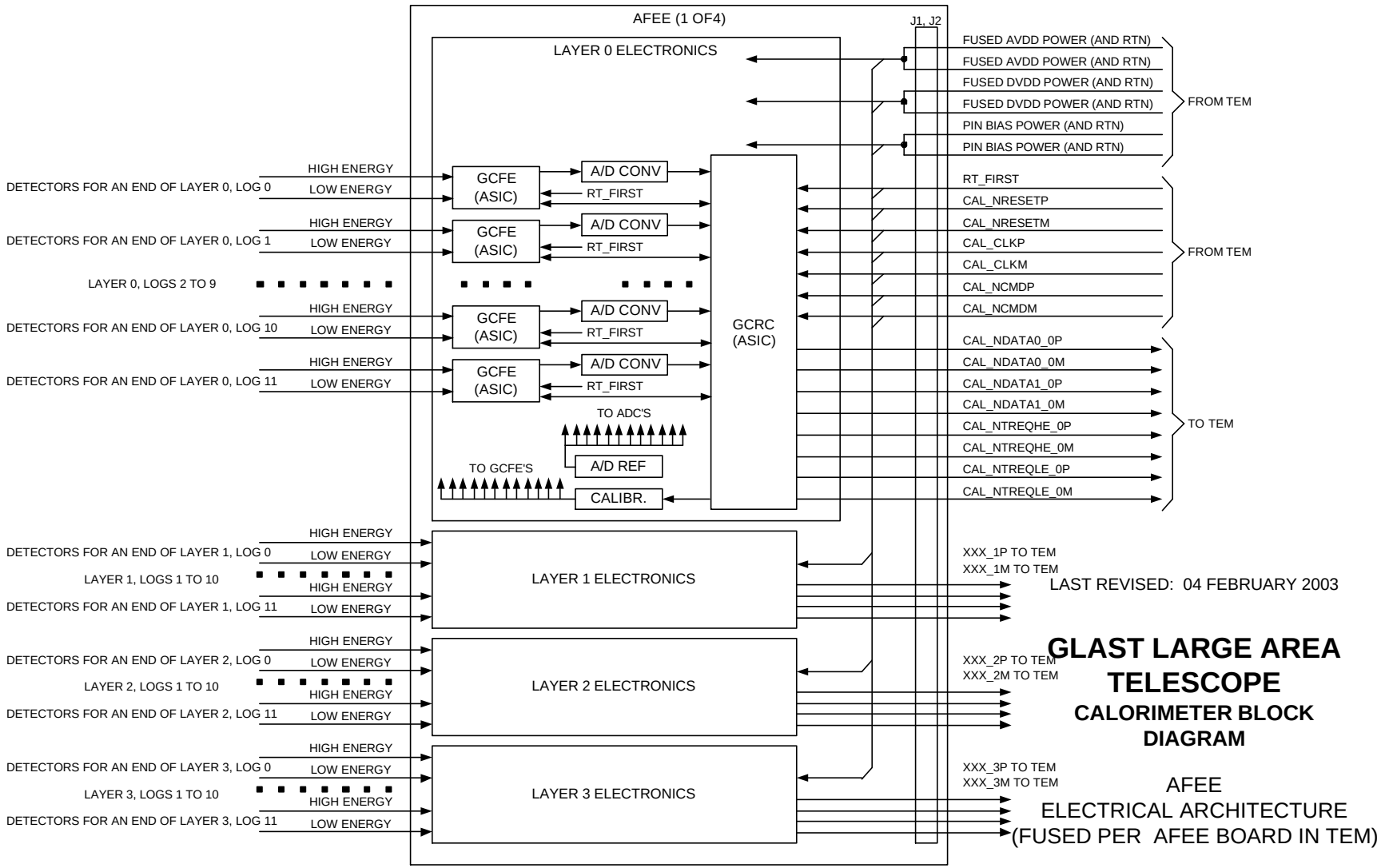
AFEE (1 OF4)
J1, J2
LAYER 0 ELECTRONICS
FUSED AVDD POWER (AND RTN)
FUSED AVDD POWER (AND RTN)
FUSED DVDD POWER (AND RTN)
FUSED DVDD POWER (AND RTN)
PIN BIAS POWER (AND RTN)
PIN BIAS POWER (AND RTN)
FROM TEM
DETECTORS FOR AN END OF LAYER 0, LOG 0
HIGH ENERGY
LOW ENERGY
GCFE (ASIC)
A/D CONV
RT_FIRST
DETECTORS FOR AN END OF LAYER 0, LOG 1
LAYER 0, LOGS 2 TO 9
DETECTORS FOR AN END OF LAYER 0, LOG 10
DETECTORS FOR AN END OF LAYER 0, LOG 11
GCRC (ASIC)
RT_FIRST
CAL_NRESETP
CAL_NRESETM
CAL_CLKP
CAL_CLKM
CAL_NCMDP
CAL_NCMDM
FROM TEM
CAL_NDATA0_0P
CAL_NDATA0_0M
CAL_NDATA1_0P
CAL_NDATA1_0M
CAL_NTREQHE_0P
CAL_NTREQHE_0M
CAL_NTREQLE_0P
CAL_NTREQLE_0M
TO TEM
TO ADC'S
A/D REF
TO GCFE'S
CALIBR.
DETECTORS FOR AN END OF LAYER 1, LOG 0
LAYER 1, LOGS 1 TO 10
DETECTORS FOR AN END OF LAYER 1, LOG 11
LAYER 1 ELECTRONICS
XXX_1P TO TEM
XXX_1M TO TEM
DETECTORS FOR AN END OF LAYER 2, LOG 0
LAYER 2, LOGS 1 TO 10
DETECTORS FOR AN END OF LAYER 2, LOG 11
LAYER 2 ELECTRONICS
XXX_2P TO TEM
XXX_2M TO TEM
DETECTORS FOR AN END OF LAYER 3, LOG 0
LAYER 3, LOGS 1 TO 10
DETECTORS FOR AN END OF LAYER 3, LOG 11
LAYER 3 ELECTRONICS
XXX_3P TO TEM
XXX_3M TO TEM
LAST REVISED: 04 FEBRUARY 2003
GLAST LARGE AREA TELESCOPE
CALORIMETER BLOCK DIAGRAM
AFEE
ELECTRICAL ARCHITECTURE
(FUSED PER AFEE BOARD IN TEM)
SHEET 4 OF 8

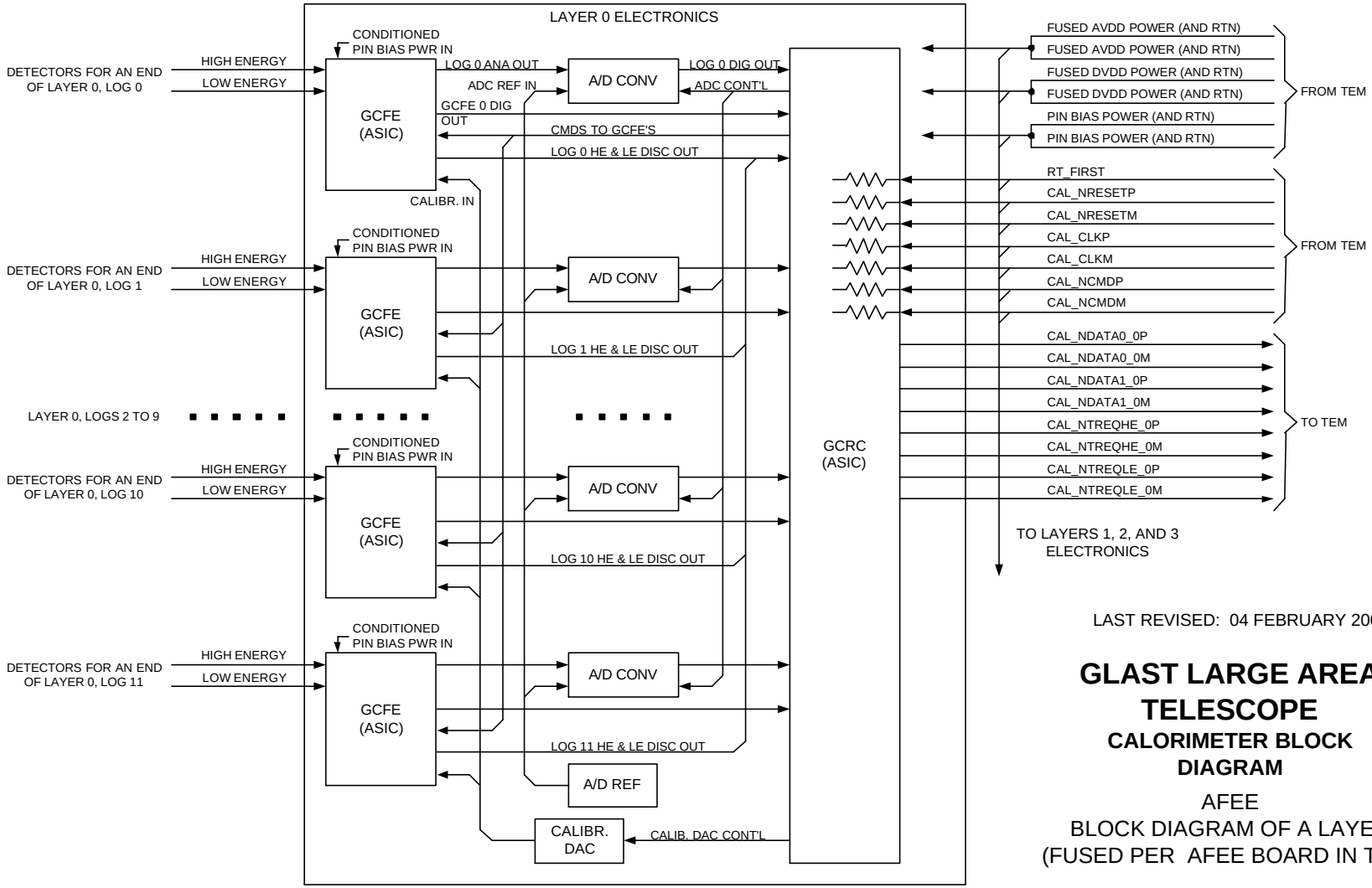

LAST REVISED: 04 FEBRUARY 2003

GLAST LARGE AREA TELESCOPE

CALORIMETER BLOCK DIAGRAM

AFEE
BLOCK DIAGRAM OF A LAYER
(FUSED PER AFEE BOARD IN TEM)

SHEET 5 OF 8

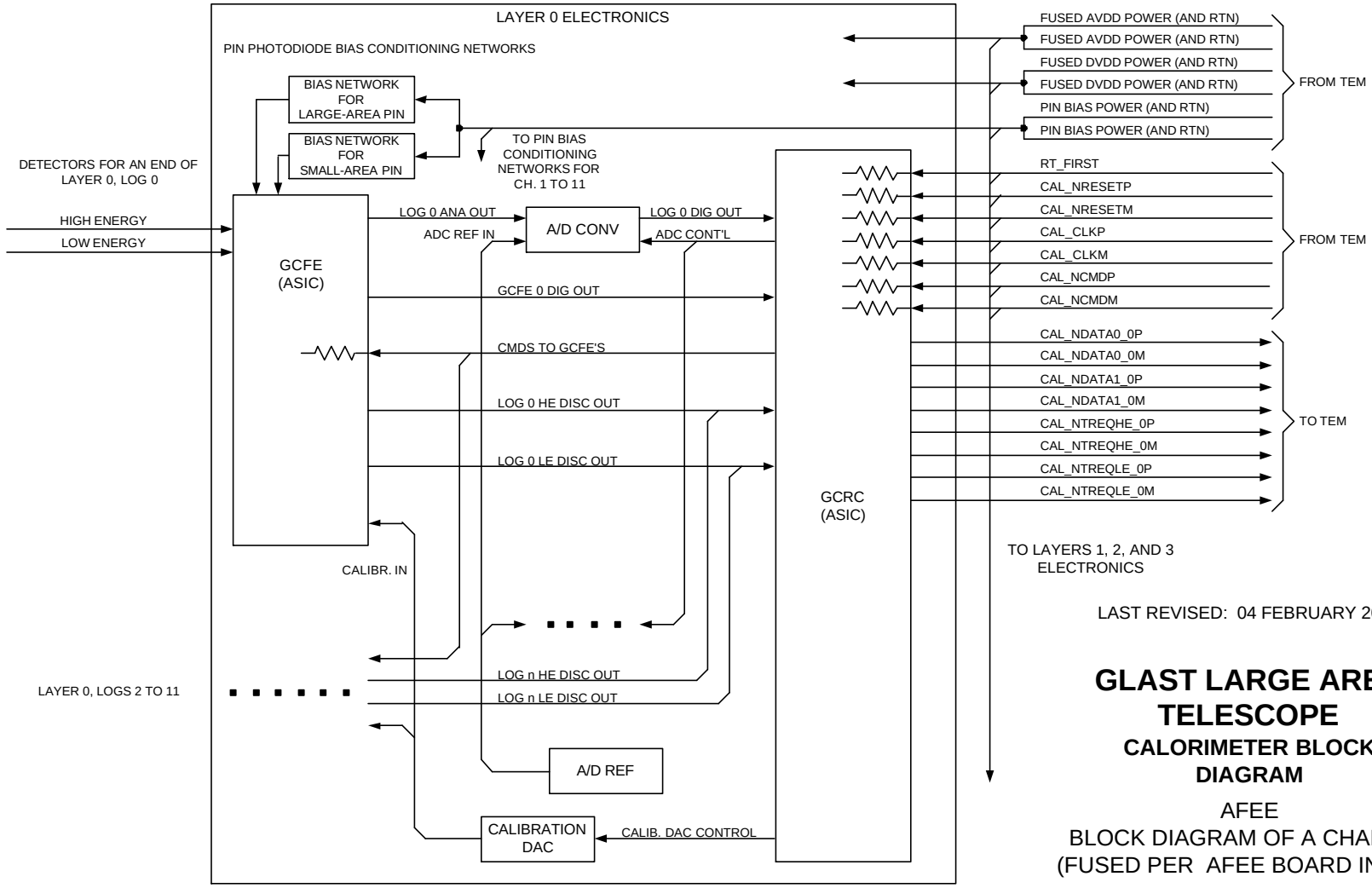

LAST REVISED: 04 FEBRUARY 2003

GLAST LARGE AREA TELESCOPE

CALORIMETER BLOCK DIAGRAM

AFEE
BLOCK DIAGRAM OF A CHANNEL
(FUSED PER AFEE BOARD IN TEM)

SHEET 6 OF 8

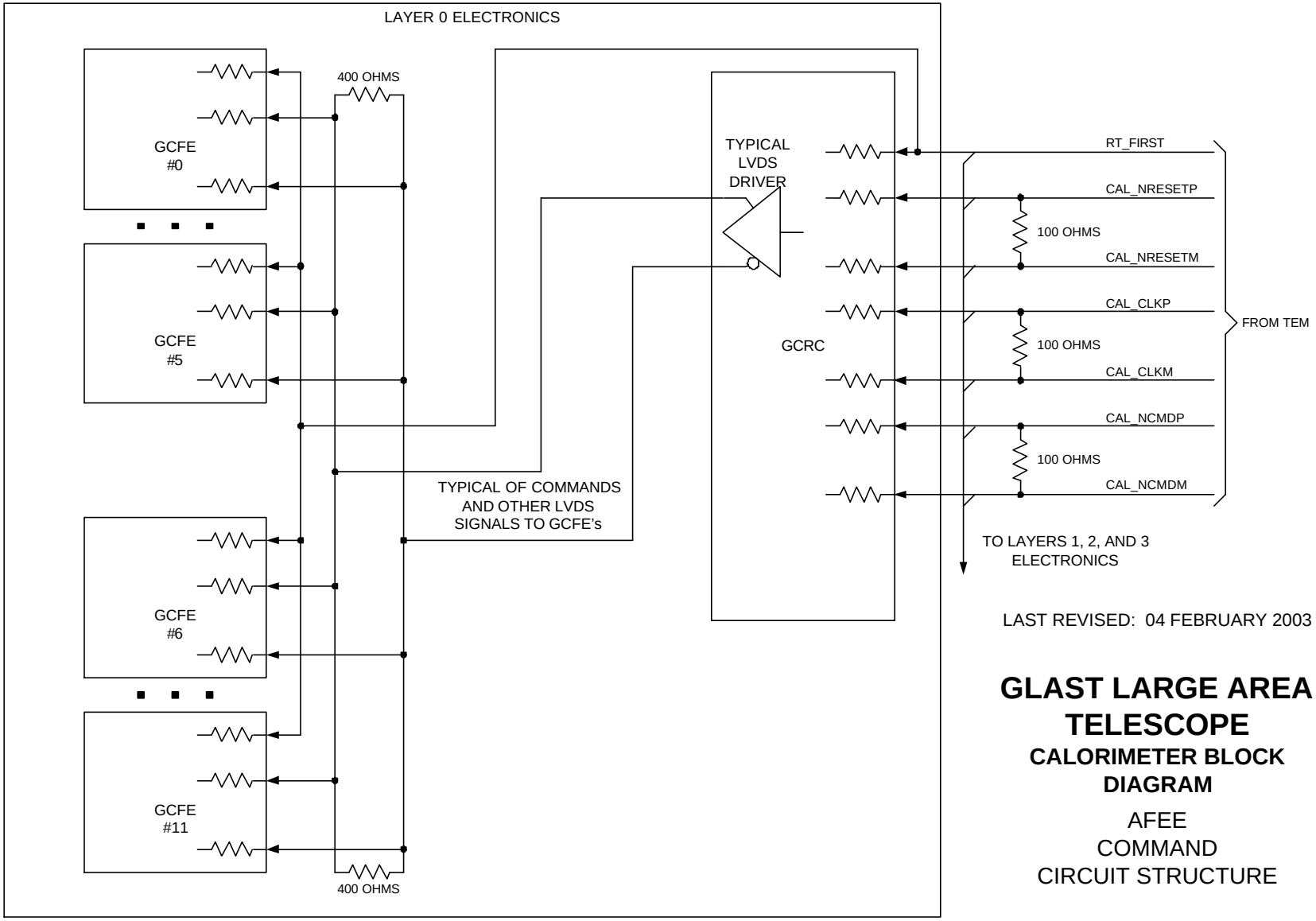

LAST REVISED: 04 FEBRUARY 2003

GLAST LARGE AREA TELESCOPE

CALORIMETER BLOCK DIAGRAM

AFEE
COMMAND
CIRCUIT STRUCTURE

SHEET 7 OF 8

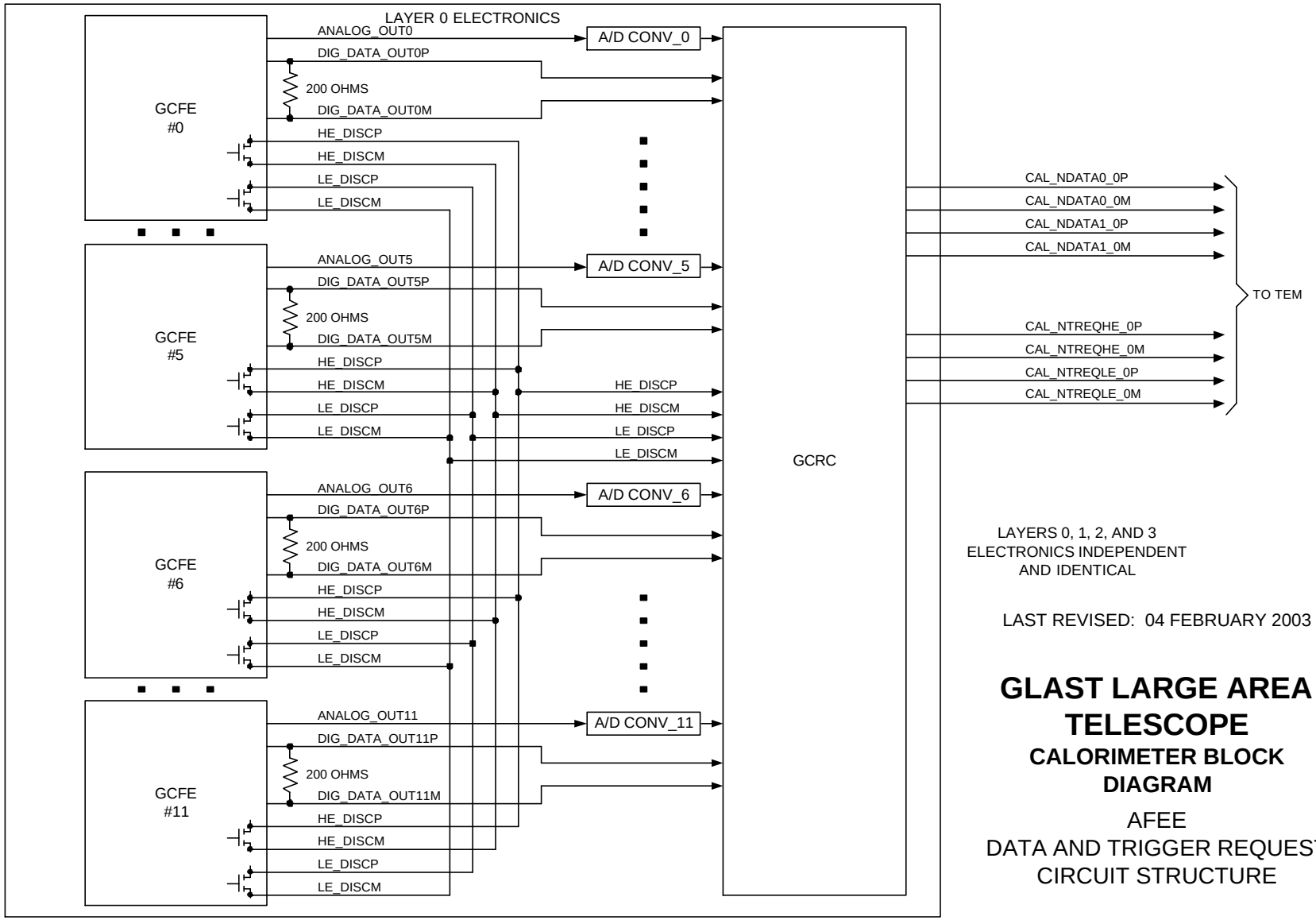

LAYERS 0, 1, 2, AND 3
ELECTRONICS INDEPENDENT
AND IDENTICAL

LAST REVISED: 04 FEBRUARY 2003

GLAST LARGE AREA TELESCOPE

CALORIMETER BLOCK DIAGRAM

AFEE
DATA AND TRIGGER REQUEST
CIRCUIT STRUCTURE

SHEET 8 OF 8

APPENDIX B

GLAST CALORIMETER

FAILURES OUTLINE FOR FMEA

GLAST CALORIMETER FAILURES OUTLINE
(Fused per AFEE Board in TEM)

	FMEA Worksheet Number	
1	1	Failures in TEM Affecting a CAL Unit (These failures listed for reference only.)
2	2	Crystal Detector Element
2.1		CsI Crystal
2.2		Optical Bond to PIN Photodiode Module
2.3		Large-Area PIN Photodiode
2.4		Small-Area PIN Photodiode
2.5		Flexible Cable from PIN Photodiode Module to AFEE
3		Analog Front End Electronics (AFEE) Board
3.1	3	AFEE Board-Level Components
3.1.1		Harness from TEM
3.1.2		AFEE Board-level failures
		One AFEE Board, Two AFEE Boards adjacent, Two AFEE Boards opposite
3.1.2.1		Reset, Command, and Clock LVDS (from TEM) Termination Resistors
3.1.2.2		Thermistor
3.2		AFEE Layer-Level Components
3.2.1	4	*(This Section Deleted)*
3.2.2	5	Power Filter Capacitors
3.2.3	6	GCRC ASIC
3.2.4	7	GCRC to GCFE Command Bus Termination Resistors
3.2.5	8	GCFE ASIC and Related Discrete Components
3.2.5.1		Power short to ground
3.2.5.2		DIG_DAT_OUT LVDS termination resistor
3.2.5.3		General chip and associated discrete components other than DIG_DAT_OUT LVDS termination resistors
3.2.5.4		Calibration Input function
3.2.5.5		Low-Energy Preamp function
3.2.5.6		High-Energy Preamp function
3.2.5.7		Low-Energy Discriminator function
3.2.5.8		High-Energy Discriminator function
3.2.5.9		Low-Energy X8 T&H function
3.2.5.10		Low-Energy X1 T&H function
3.2.5.11		High-Energy X8 T&H function
3.2.5.12		High-Energy X1 T&H function
3.2.5.13		Range-Select function
3.2.5.14		Digital Data Output function
3.2.5.15		Analog Multiplexer and Output Buffer function
3.2.6	9	AFEE Board Discrete Component Networks
3.2.6.1		Low-Energy (Large Area) PIN Photodiode Bias R-C Network
3.2.6.2		High-Energy (Small Area) PIN Photodiode Bias R-C Network
3.2.6.3		Low-Energy Input Discrete Component R-C Network
3.2.6.4		High-Energy Input Discrete Component R-C Network
3.2.6.5		Low-Energy Discriminator Wire-OR Network
3.2.6.6		High-Energy Discriminator Wire-OR Network
3.2.7	10	Other AFEE Board Data Components
3.2.7.1		Power short to ground
3.2.7.2		Analog to Digital Converter (ADC)
3.2.7.3		ADC Reference
3.2.7.4		Calibration DAC

APPENDIX C

FMEA WORKSHEETS

FAILURE MODES AND EFFECTS ANALYSIS
GLAST LARGE AREA TELESCOPE CALORIMETER (CAL)

MISSION: CALORIMETER (CAL)
SYSTEM: 1.0 FAILURES IN TEM AFFECTING A CAL UNIT
SUBSYSTEM/INSTRUMENT: **SOME TEM FAILURES – SHOWN HERE FOR REFERENCE ONLY**
COMPONENT:
MISSION PHASE: ON-ORBIT

SHEET 1 OF 10
DATE 02/07/2003
PREPARED BY R E Prince
APPROVED BY

FAILURE ID IN 1.0	IDENTIFICATION OF ITEM OR FUNCTION	A. FAILURE MODE B. FAILURE CAUSE	FAILURE EFFECTS A. LOCAL OR SUBSYSTEM B. NEXT HIGHER LEVEL - SYSTEM C. END EFFECT – MISSION	SEVERITY CATEGORY	REMARKS A. FAILURE DETECTION METHODS B. COMPENSATING FEATURES/ACTION C. OTHER
1.0 1	1.1 ONE ENTIRE CAL TOWER	A. POWER, CLOCK, COMMAND FAILURE, ANY NON-REDUNDANT FAILURE (PRESUMABLY IT WOULD BE IN THE TEM) B. ANY	A. LOSS OF AFFECTED FUNCTION B. LOSS OF THE ENTIRE CAL TOWER C. LOSS OF 1/16 OF ENTIRE LAT DATA, COSMIC RAY REJECTION COMPROMISED	2R	A. LOSS OF TOWER DATA, ENG TLM B. 16 TOWERS PROVIDE REDUNDANCY, SOFTWARE MODS NECESSARY C. 3 TOWERS COULD BE LOST AND STILL MEET MISSION REQUIREMENTS AS LONG AS THE 3 FAILED TOWERS DO NOT ABUT
2	1.2 DVDD AND AVDD POWER FUSES (1 DVDD FUSE AND 1 AVDD FUSE PER AFEE "BOARD")	A. FUSE OPENS B. FUSE FAILURE OR FUSE OPERATION DUE TO ANOTHER FAILURE	A. LOSS OF THE AFEE BOARD PROTECTED BY THE FAILED FUSE B. LOSS OF LONGITUDINAL POSITION INFO FROM ONE END OF ALL FOUR LAYERS OF CRYSTALS ORIENTED IN SAME DIRECTION (48 CRYSTALS TOTAL) C. NONE SIGNIFICANT	3R	A. LOSS OF DATA FROM AFFECTED AFEE B. DATA FROM OTHER END OF LAYER (OPPOSITE AFEE) IS AVAILABLE C. SATISFACTORY OPERATION OF A CAL CAN BE OBTAINED FROM ANY 3 AFEEs OR ANY TWO ADJACENT AFEE BOARDS.

NOTE: THESE FAILURE MODES ARE NOT CAL FAILURE MODES – THEY ARE TEM FAILURES THAT ARE KNOWN SINGLE-POINT FAILURE MODES THAT AFFECT THE CAL. THESE FAILURE MODES ARE PROPERLY BUDGETED TO THE TEM. THEY ARE SHOWN HERE FOR INFORMATION AND REFERENCE ONLY.

FAILURE MODES AND EFFECTS ANALYSIS
GLAST LARGE AREA TELESCOPE CALORIMETER (CAL)

MISSION: CALORIMETER (CAL)
SYSTEM: 2.0 CRYSTAL DETECTOR ELEMENT
SUBSYSTEM/INSTRUMENT:
COMPONENT:
MISSION PHASE: ON-ORBIT

SHEET 2 OF 10
DATE 11/13/2001
PREPARED BY R E Prince
APPROVED BY

FAILURE ID IN 2.0	IDENTIFICATION OF ITEM OR FUNCTION	A. FAILURE MODE B. FAILURE CAUSE	FAILURE EFFECTS A. LOCAL OR SUBSYSTEM B. NEXT HIGHER LEVEL - SYSTEM C. END EFFECT – MISSION	SEVERITY CATEGORY	REMARKS A. FAILURE DETECTION METHODS B. COMPENSATING FEATURES/ACTION C. OTHER
2.1 1	2.1 CsI CRYSTAL ELEMENT (96 TOTAL PER CAL)	A. A CRYSTAL BREAKS B. MECHANICAL MOUNTING FAILURE, VIBRATION	A. NO ENERGY TO DETECTOR MODULE ON ONE END OF CRYSTAL B. LOSE LONGITUDINAL POSITION INFO IN ONE CRYSTAL, LOSE REDUNDANCY IN ONE CRYSTAL C. NONE SIGNIFICANT	3R	A. LOSS OF DATA FROM AFFECTED CRYSTAL, ENG TLM B. DATA FROM OTHER END OF CRYSTAL, DATA FROM CRYSTALS IN ADJACENT LAYERS OF CAL. C. 96 CRYSTALS TOTAL, DATA FROM OTHER CRYSTALS NOT AFFECTED.
2.2 1	2.2 OPTICAL BOND BETWEEN CRYSTAL ELEMENT AND PIN PHOTODIODE DETECTOR MODULE (1 PER CRYSTAL END; 192 TOTAL PER CAL)	A. BREAKAGE, SEPARATION B. MECHANICAL MOUNTING FAILURE, VIBRATION	A. ABOUT 50% REDUCTION IN ENERGY TO DETECTOR MODULE ON ONE END OF CRYSTAL B. DEGRADATION OF LONGITUDINAL POSITION INFO IN ONE CRYSTAL C. NONE SIGNIFICANT	4	A. DEGRADATION OR LOSS OF LOW ENERGY DATA FROM AFFECTED DETECTOR MODULE B. DATA FROM OTHER END OF CRYSTAL, DATA FROM CRYSTALS IN ADJACENT LAYERS OF CAL.
2.3 1	2.3 LARGE-AREA PIN PHOTODIODE (1 PER CRYSTAL END; 192 TOTAL PER CAL)	A. OPEN CIRCUIT B. ANY	A. LOSS OF SIGNAL OUTPUT FROM ONE END OF CRYSTAL, 50% REDUCTION IN <1.6 GeV ENERGY MEASURED IN ONE CRYSTAL B. DEGRADATION OF LONGITUDINAL POSITION INFO FROM ONE CRYSTAL C. NONE SIGNIFICANT	3R	A. LOSS OF LOW ENERGY DATA FROM AFFECTED DETECTOR MODULE B. DATA FROM OTHER END OF CRYSTAL, DATA FROM CRYSTALS IN ADJACENT LAYERS OF CAL.
2.3 2		A. LOSS OF BIAS B. BROKEN WIRE OR BROKEN CONNECTION	A. INCREASED NOISE FROM ONE END OF CRYSTAL, DECREASED RESOLUTION IN <1.6 GeV ENERGY MEASURED IN ONE CRYSTAL B. DEGRADATION OF LONGITUDINAL POSITION INFO FROM ONE CRYSTAL C. NONE SIGNIFICANT	4	A. LOW-ENERGY DATA FROM AFFECTED DETECTOR MODULE B. RAISE ZERO-SUPPRESS LLD FOR THIS CHANNEL, DATA FROM OTHER END OF CRYSTAL, DATA FROM CRYSTALS IN ADJACENT LAYERS OF CAL.

FAILURE MODES AND EFFECTS ANALYSIS
GLAST LARGE AREA TELESCOPE CALORIMETER (CAL)

MISSION: CALORIMETER (CAL)
SYSTEM: 2.0 CRYSTAL DETECTOR ELEMENT
SUBSYSTEM/INSTRUMENT:
COMPONENT:
MISSION PHASE: ON-ORBIT

SHEET 2 OF 10
DATE 11/13/2001
PREPARED BY R E Prince
APPROVED BY

FAILURE ID IN 2.0	IDENTIFICATION OF ITEM OR FUNCTION	A. FAILURE MODE B. FAILURE CAUSE	FAILURE EFFECTS A. LOCAL OR SUBSYSTEM B. NEXT HIGHER LEVEL - SYSTEM C. END EFFECT – MISSION	SEVERITY CATEGORY	REMARKS A. FAILURE DETECTION METHODS B. COMPENSATING FEATURES/ACTION C. OTHER
2.4 1	2.4 SMALL-AREA PIN PHOTODIODE (1 PER CRYSTAL END; 192 TOTAL PER CAL)	A. OPEN CIRCUIT B. ANY	A. LOSS OF SIGNAL OUTPUT FROM ONE END OF CRYSTAL, 50% REDUCTION IN >1.6 GeV ENERGY MEASURED IN ONE CRYSTAL B. DEGRADATION OF LONGITUDINAL POSITION INFO FROM ONE CRYSTAL C. NONE SIGNIFICANT	3R	A. LOSS OF HIGH ENERGY DATA FROM AFFECTED DETECTOR MODULE B. DATA FROM OTHER END OF CRYSTAL, DATA FROM CRYSTALS IN ADJACENT LAYERS OF CAL.
2.4 2		A. LOSS OF BIAS B. BROKEN WIRE OR BROKEN CONNECTION	A. INCREASED NOISE FROM ONE END OF CRYSTAL, DECREASED RESOLUTION IN >1.6 GeV ENERGY MEASURED IN ONE CRYSTAL B. DEGRADATION OF LONGITUDINAL POSITION INFO FROM ONE CRYSTAL C. NONE SIGNIFICANT	4	A. HIGH ENERGY DATA FROM AFFECTED DETECTOR MODULE B. RAISE ZERO-SUPPRESS LLD FOR THIS CHANNEL, DATA FROM OTHER END OF CRYSTAL, DATA FROM CRYSTALS IN ADJACENT LAYERS OF CAL.
2.5 1	2.5 FLEXIBLE CABLE FROM PIN PHOTODIODE MODULE TO AFEE (1 PER CRYSTAL END; 192 TOTAL PER CAL)	A. OPEN CIRCUIT B. BROKEN TRACE OR BROKEN CONNECTION	A. LOSS OF SIGNAL TO AFEE FROM ONE DETECTOR OUTPUT FROM ONE CRYSTAL B. DEGRADATION OF LONGITUDINAL POSITION INFO FROM ONE CRYSTAL C. NONE SIGNIFICANT	3R	A. LOSS OF DATA FROM AFFECTED DETECTOR MODULE B. DATA FROM OTHER END OF CRYSTAL, DATA FROM CRYSTALS IN ADJACENT LAYERS OF CAL.

FAILURE MODES AND EFFECTS ANALYSIS
GLAST LARGE AREA TELESCOPE CALORIMETER (CAL)

MISSION: CALORIMETER (CAL)
SYSTEM: 3.0 ANALOG FRONT END ELECTRONICS (AFEE) BOARD
SUBSYSTEM/INSTRUMENT: 3.1 AFEE BOARD-LEVEL COMPONENTS
COMPONENT:
MISSION PHASE: ON-ORBIT

SHEET 3 OF 10
DATE 08/16/2002
PREPARED BY R E Prince
APPROVED BY

FAILURE ID IN 3.1	IDENTIFICATION OF ITEM OR FUNCTION	A. FAILURE MODE B. FAILURE CAUSE	FAILURE EFFECTS A. LOCAL OR SUBSYSTEM B. NEXT HIGHER LEVEL - SYSTEM C. END EFFECT – MISSION	SEVERITY CATEGORY	REMARKS A. FAILURE DETECTION METHODS B. COMPENSATING FEATURES/ACTION C. OTHER
3.1.1 1	3.1.1 HARNESS FROM TEM (1 PER AFEE, 4 PER CAL)	A. A WIRE OPENS OR SHORTS B. ANY	A. WORST CASE, ONE AFEE FAILS TO OPERATE B. LOSS OF LONGITUDINAL POSITION INFO FROM ONE END OF ALL CRYSTALS ORIENTED IN SAME DIRECTION C. NONE SIGNIFICANT	3R	A. LOSS OF DATA FROM AFFECTED AFEE B. DATA FROM OTHER END OF CRYSTAL (OPPOSITE AFEE) AND ALL DATA FROM ORTHOGONAL CRYSTALS IS AVAILABLE C. SEE NOTE BELOW
3.1.2 1	3.1.2 AFEE BOARD-LEVEL FAILURES	A. FAILURE OF COMPONENTS ON AFEE THAT ARE NOT REPLICATED FOR EACH OF THE 4 LAYERS PER AFEE (MOSTLY 3.3VDC POWER ITEMS) B. ANY	A. WORST CASE, ONE AFEE FAILS TO OPERATE B. LOSS OF LONGITUDINAL POSITION INFO FROM ONE END OF ALL CRYSTALS ORIENTED IN SAME DIRECTION C. NONE SIGNIFICANT	3R	A. LOSS OF DATA FROM AFFECTED AFEE B. DATA FROM OTHER END OF CRYSTAL (OPPOSITE AFEE) AND ALL DATA FROM ORTHOGONAL CRYSTALS IS AVAILABLE C. SEE NOTE BELOW
NOTE: EACH CALORIMETER CONTAINS 4 AFEE BOARDS. THE CAL IS AT LEAST 1-ENTIRE AFEE FAILURE-TOLERANT AND IN SOME CASES 2-ENTIRE AFEE FAILURE-TOLERANT. AN AFEE BOARD HAS VERY FEW BOARD-LEVEL UNIQUE COMPONENTS THAT CAN CAUSE LOSS OF THE ENTIRE BOARD. THE BULK OF THE AFEE BOARD CONSISTS OF 4 IDENTICAL SETS OF COMPONENTS THAT OPERATE IDEPENDENTLY AND IN PARALLEL, EACH SET SUPPORTING ONE "LAYER" OF 12 CRYSTAL DETECTOR ELEMENTS.. SATISFACTORY OPERATION OF A CALORIMETER CAN BE OBTAINED FROM ANY 3 AFEEs OR ANY TWO ADJACENT AFEE BOARDS. THUS, GIVEN TWO FAILED AFEE BOARDS, ANY COMBINATION OF ONE "X" AFEE AND ONE "Y" AFFE (EITHER OF THEM "+" OR "-" WILL ALLOW ACCEPTABLE CAL OPERATION: IF TWO FAILED AFEE BOARDS ARE OPPOSITE (BOTH "X" BOARDS OR BOTH "Y" BOARDS), THAT CALORIMETER IS CONSIDERED FAILED. EVEN WITH A FAILED CALORIMETER, THE 16 CAL'S IN THE LAT ALLOW SUCCESSFUL LAT OPERATION.					
3.1.2.1 1	3.1.2.1 RESET, COMMAND, AND CLOCK LVDS (FROM TEM) TERMINATION RESISTORS	A. THREE RESISTORS, ANY ONE OF THEM OPENS OR SHORTS B. ANY	A. CANNOT COMMAND OR CONTROL THIS AFEE B. LOSS OF LONGITUDINAL POSITION INFO FROM ONE END OF ALL CRYSTALS ORIENTED IN SAME DIRECTION C. NONE SIGNIFICANT	3R	A. LOSS OF DATA FROM AFFECTED AFEE B. DATA FROM OTHER END OF CRYSTAL (OPPOSITE AFEE) AND ALL DATA FROM ORTHOGONAL CRYSTALS IS AVAILABLE C. SEE NOTE BELOW
3.1.2.2 1	3.1.2.2 THERMISTORS (2 PER AFEE)	A. FAILURE TO OPERATE B. ANY	A. LOSS OF ONE TEMPERATURE DATA POINT FROM THE AFEE B. NONE C. NONE	4	A. COMPARE TEMPERATURE DATA WITH EXPECTED RESULTS, COMPARE WITH TEMPERATURE DATA FROM OTHER AFEE'S B. DATA FROM OTHER AFEE'S AVAILABLE
3.1.2.2 2		A. LOSS OF ACCURACY B. ANY	A. DEGRADATION OF ONE TEMPERATURE DATA POINT FROM THE AFEE B. NONE C. NONE	4	A. COMPARE TEMPERATURE DATA WITH EXPECTED RESULTS, COMPARE WITH TEMPERATURE DATA FROM OTHER AFEE'S B. DATA FROM OTHER AFEE'S AVAILABLE

FAILURE MODES AND EFFECTS ANALYSIS
GLAST LARGE AREA TELESCOPE CALORIMETER (CAL)

MISSION	CALORIMETER (CAL)	SHEET	5 OF 10
SYSTEM	3.0 ANALOG FRONT END ELECTRONICS (AFEE)	DATE	08/16/2002
SUBSYSTEM/INSTRUMENT	3.2 AFEE LAYER-LEVEL COMPONENTS	PREPARED BY	R E Prince
COMPONENT	3.2.2 POWER FILTER CAPACITORS FOR DVDD AND AVDD	APPROVED BY	
MISSION PHASE	ON-ORBIT		

FAILURE ID IN 3.2.2	IDENTIFICATION OF ITEM OR FUNCTION	A. FAILURE MODE B. FAILURE CAUSE	FAILURE EFFECTS A. LOCAL OR SUBSYSTEM B. NEXT HIGHER LEVEL - SYSTEM C. END EFFECT – MISSION	SEVERITY CATEGORY	REMARKS A. FAILURE DETECTION METHODS B. COMPENSATING FEATURES/ACTION C. OTHER
3.2.2 1	3.2.2 POWER FILTER CAPACITORS FOR DVDD AND AVDD (MANY EACH FOR DVDD AND AVDD PER AFEE "LAYER")	A. CAPACITOR OPENS B. ANY	A. NONE – MULTIPLE CAPS PER POWER B. NONE C. NONE	4	A. NONE B. NONE REQUIRD – MULTIPLE CAPACITORS C. NONE
3.2.2 2		A. CAPACITOR SHORTS B. ANY	A. ASSOCIATED FUSE BLOWS; LOSS OF THE AFEE LAYER; FUSE PROTECTS OTHER LAYERS. B. LOSS OF LONGITUDINAL POSITION INFO FROM ONE END OF ONE LAYER OF CRYSTALS ORIENTED IN SAME DIRECTION (12 CRYSTALS TOTAL) C. NONE SIGNIFICANT	3R	A. LOSS OF DATA FROM AFFECTED AFEE B. DATA FROM OTHER END OF LAYER (OPPOSITE AFEE) AND ALL DATA FROM ALL OTHER LAYERS IS AVAILABLE C. SATISFACTORY OPERATION OF A CAL CAN BE OBTAINED FROM ANY 3 AFEEs OR ANY TWO ADJACENT AFEE BOARDS.

FAILURE MODES AND EFFECTS ANALYSIS
GLAST LARGE AREA TELESCOPE CALORIMETER (CAL)

MISSION	CALORIMETER (CAL)	SHEET	6 OF 10
SYSTEM	3.0 ANALOG FRONT END ELECTRONICS (AFEE)	DATE	11/13/2001
SUBSYSTEM/INSTRUMENT	3.2 AFEE LAYER-LEVEL COMPONENTS	PREPARED BY	R E Prince
COMPONENT	3.2.3 GLAST CAL READOUT CONTROL (GCRC) ASIC	APPROVED BY	
MISSION PHASE	ON-ORBIT		

FAILURE ID IN 3.2.3	IDENTIFICATION OF ITEM OR FUNCTION	A. FAILURE MODE B. FAILURE CAUSE	FAILURE EFFECTS A. LOCAL OR SUBSYSTEM B. NEXT HIGHER LEVEL - SYSTEM C. END EFFECT – MISSION	SEVERITY CATEGORY	REMARKS A. FAILURE DETECTION METHODS B. COMPENSATING FEATURES/ACTION C. OTHER
3.2.3 1	3.2.3 GCRC ASIC (1 PER AFEE "LAYER", 4 PER AFEE, 16 PER CAL)	A. ANY GCRC FAILURE (THERE ARE PROBABLY GCRC FAILURE MODES THAT DON'T COMPLETELY KILL THE DEVICE, BUT THEY AREN'T OBVIOUS AT THIS PRELIMINARY DESIGN STAGE) B. ANY	A. WORST CASE, ONE AFEE LAYER OF 4 FAILS TO OPERATE B. LOSS OF LONGITUDINAL POSITION INFO FROM ONE END OF ONE LAYER OF CRYSTALS ORIENTED IN SAME DIRECTION (12 CRYSTALS TOTAL) C. NONE SIGNIFICANT	3R	A. LOSS OF DATA FROM AFFECTED AFEE B. DATA FROM OTHER END OF LAYER (OPPOSITE AFEE) AND ALL DATA FROM ALL OTHER LAYERS IS AVAILABLE C. SATISFACTORY OPERATION OF A CAL CAN BE OBTAINED FROM ANY 3 AFEEs OR ANY TWO ADJACENT AFEE BOARDS.
	ADDITIONAL AND SPECIFIC GCRC FAILURES RESULTING IN LESS THAN TOTAL AFEE LOSS WILL BE ADDED AS THEY BECOME KNOWN!				

FAILURE MODES AND EFFECTS ANALYSIS
GLAST LARGE AREA TELESCOPE CALORIMETER (CAL)

MISSION: CALORIMETER (CAL)
SYSTEM: 3.0 ANALOG FRONT END ELECTRONICS (AFEE)
SUBSYSTEM/INSTRUMENT: 3.2 AFEE LAYER-LEVEL COMPONENTS
COMPONENT: 3.2.4 GCRC TO GCFE COMMAND BUS TERMINATION RESISTORS
MISSION PHASE: ON-ORBIT

SHEET 7 OF 10
DATE 08/16/2002
PREPARED BY R E Prince
APPROVED BY

FAILURE ID IN 3.2.4	IDENTIFICATION OF ITEM OR FUNCTION	A. FAILURE MODE B. FAILURE CAUSE	FAILURE EFFECTS A. LOCAL OR SUBSYSTEM B. NEXT HIGHER LEVEL - SYSTEM C. END EFFECT – MISSION	SEVERITY CATEGORY	REMARKS A. FAILURE DETECTION METHODS B. COMPENSATING FEATURES/ACTION C. OTHER
3.2.4 1	3.2.4 GCRC TO GCFE COMMAND BUS TERMINATION RESISTORS (2 PER AFEE "LAYER") (RESISTORS ARE AT OPPOSITE ENDS OF BUS, BUS IS DRIVEN AT CENTER)	A. RESISTOR OPENS B. ANY	A. NONE – TWO RESISTORS PER COMMAND BUS SIGNAL B. NONE C. NONE	4	A. NONE B. NONE REQUIRD – MULTIPLE CAPACITORS C. NONE
3.2.4 2		A. RESISTOR SHORTS B. ANY	A. ONE AFEE LAYER OF 4 FAILS TO OPERATE B. LOSS OF LONGITUDINAL POSITION INFO FROM ONE END OF ONE LAYER OF CRYSTALS ORIENTED IN SAME DIRECTION (12 CRYSTALS TOTAL) C. NONE SIGNIFICANT	3R	A. LOSS OF DATA FROM AFFECTED AFEE B. DATA FROM OTHER END OF LAYER (OPPOSITE AFEE) AND ALL DATA FROM ALL OTHER LAYERS IS AVAILABLE C. SATISFACTORY OPERATION OF A CAL CAN BE OBTAINED FROM ANY 3 AFEEs OR ANY TWO ADJACENT AFEE BOARDS.

FAILURE MODES AND EFFECTS ANALYSIS
GLAST LARGE AREA TELESCOPE CALORIMETER (CAL)

MISSION: CALORIMETER (CAL)
SYSTEM: 3.0 ANALOG FRONT END ELECTRONICS (AFEE)
SUBSYSTEM/INSTRUMENT: 3.2 AFEE LAYER-LEVEL COMPONENTS
COMPONENT: 3.2.5 GLAST CAL FRONT-END ELECTRONICS (GCFE) ASIC
MISSION PHASE: ON-ORBIT

SHEET 8 OF 10
DATE 08/16/2002
PREPARED BY R E Prince
APPROVED BY

FAILURE ID IN 3.2.5	IDENTIFICATION OF ITEM OR FUNCTION	A. FAILURE MODE B. FAILURE CAUSE	FAILURE EFFECTS A. LOCAL OR SUBSYSTEM B. NEXT HIGHER LEVEL - SYSTEM C. END EFFECT – MISSION	SEVERITY CATEGORY	REMARKS A. FAILURE DETECTION METHODS B. COMPENSATING FEATURES/ACTION C. OTHER
3.2.5.1 1	3.2.5.1 DVDD OR AVDD POWER SHORT TO GROUND	A. SHORT OF FILTER CAP OR OTHER COMPONENTS NOT RELATED TO SPECIFIC GCFE FUNCTIONS B. ANY	A. ASSOCIATED FUSE BLOWS; LOSS OF THE AFEE LAYER; FUSE PROTECTS OTHER LAYERS. B. LOSS OF LONGITUDINAL POSITION INFO FROM ONE END OF ONE LAYER OF CRYSTALS ORIENTED IN SAME DIRECTION (12 CRYSTALS TOTAL) C. NONE SIGNIFICANT	3R	A. LOSS OF DATA FROM AFFECTED AFEE B. DATA FROM OTHER END OF LAYER (OPPOSITE AFEE) AND ALL DATA FROM ALL OTHER LAYERS IS AVAILABLE C. SATISFACTORY OPERATION OF A CAL CAN BE OBTAINED FROM ANY 3 AFEEs OR ANY TWO ADJACENT AFEE BOARDS.
3.2.5.2 1	3.2.5.2 "DIG_DAT_OUT" LVDS TERMINATION RESISTOR	A. RESISTOR OPEN OR SHORT B. ANY	A. LOSS OF DIGITAL DATA OUTPUT FROM ONE GCFE B. LOSS OF GCFE DIGITAL DATA OUTPUT FROM ONE END OF ONE CRYSTAL C. NONE SIGNIFICANT	3R	A. LOSS OF SOME GCFE DIGITAL DATA FROM AFFECTED AFEE B. ANALOG DATA FROM THIS GCFE AND DATA FROM OTHER END OF CRYSTAL (OPPOSITE AFEE) AND ALL DATA FROM ALL OTHER CRYSTALS AND LAYERS AVAILABLE
3.2.5.3 1	3.2.5.3 GENERAL GCFE CHIP AND ASSOCIATED DISCRETE COMPONENT (EXCEPT ABOVE) FAILURES	A. ANY GENERAL GCFE FAILURE OR FAILURE OF DISCRETE COMPONENTS NOT RELATED TO SPECIFIC GCFE FUNCTIONS B. ANY	A. WORST CASE, ONE CRYSTAL END OF ONE AFEE LAYER FAILS TO OPERATE (ONE CRYSTAL END OF ONE AFEE LAYER) B. LOSS OF LONGITUDINAL POSITION INFO FROM ONE END OF ONE CRYSTAL OF ONE LAYER (12 CRYSTALS/LAYER, 4 LAYERS/AFEE) C. NONE SIGNIFICANT	3R	A. LOSS OF DATA FROM AFFECTED AFEE B. DATA FROM OTHER END OF CRYSTAL (OPPOSITE AFEE) AND ALL DATA FROM ALL OTHER CRYSTALS AND LAYERS AVAILABLE C. SATISFACTORY OPERATION OF A CAL CAN BE OBTAINED FROM ANY 3 AFEEs OR ANY TWO ADJACENT AFEE BOARDS.
3.2.5.4 1	3.2.5.4 GCFE PREAMP CALIBRATION FUNCTION	A. THIS GCFE FUNCTION FAILS B. ANY	A. LOSS OF COMMANDED CALIBRATION CAPABILITY FROM ONE GCFE (ONE CRYSTAL END OF ONE AFEE LAYER) B. LOSS OF ACCURATE CALIBRATION OF LONGITUDINAL POSITION INFO FROM ONE END OF ONE CRYSTAL C. NONE SIGNIFICANT	3R	A. COMPARE DATA WITH EXPECTED RESULTS, COMPARE WITH DATA FROM OTHER CRYSTALS B. DATA FROM OTHER END OF CRYSTAL (OPPOSITE AFEE) AND ALL DATA FROM ALL OTHER CRYSTALS AND LAYERS AVAILABLE
3.2.5.5 1	3.2.5.5 GCFE LOW-ENERGY PREAMP FUNCTION	A. THIS GCFE FUNCTION FAILS B. ANY	A. LOSS OF BOTH X1 AND X8 LOW-ENERGY OUTPUTS FOR ONE OR MORE COMMANDED GAINS FROM ONE GCFE B. LOSS OF LOW-ENERGY LONGITUDINAL POSITION INFO FROM ONE END OF ONE CRYSTAL C. NONE SIGNIFICANT	3R	A. LOSS OF DATA FROM AFFECTED AFEE B. DATA FROM OTHER END OF CRYSTAL (OPPOSITE AFEE) AND ALL DATA FROM ALL OTHER CRYSTALS AND LAYERS AVAILABLE

FAILURE MODES AND EFFECTS ANALYSIS
GLAST LARGE AREA TELESCOPE CALORIMETER (CAL)

MISSION: CALORIMETER (CAL)
SYSTEM: 3.0 ANALOG FRONT END ELECTRONICS (AFEE)
SUBSYSTEM/INSTRUMENT: 3.2 AFEE LAYER-LEVEL COMPONENTS
COMPONENT: 3.2.5 GLAST CAL FRONT-END ELECTRONICS (GCFE) ASIC
MISSION PHASE: ON-ORBIT

SHEET 8 OF 10
DATE 08/16/2002
PREPARED BY R E Prince
APPROVED BY

FAILURE ID IN 3.2.5	IDENTIFICATION OF ITEM OR FUNCTION	A. FAILURE MODE B. FAILURE CAUSE	FAILURE EFFECTS A. LOCAL OR SUBSYSTEM B. NEXT HIGHER LEVEL - SYSTEM C. END EFFECT – MISSION	SEVERITY CATEGORY	REMARKS A. FAILURE DETECTION METHODS B. COMPENSATING FEATURES/ACTION C. OTHER
3.2.5.6 1	3.2.5.6 GCFE HIGH-ENERGY PREAMP FUNCTION	A. THIS GCFE FUNCTION FAILS B. ANY	A. LOSS OF BOTH X1 AND X8 HIGH-ENERGY OUTPUTS FOR ONE OR MORE COMMANDED GAINS FROM ONE GCFE B. LOSS OF HIGH-ENERGY LONGITUDINAL POSITION INFO FROM ONE END OF ONE CRYSTAL C. NONE SIGNIFICANT	3R	A. LOSS OF DATA FROM AFFECTED AFEE B. DATA FROM OTHER END OF CRYSTAL (OPPOSITE AFEE) AND ALL DATA FROM ALL OTHER CRYSTALS AND LAYERS AVAILABLE
3.2.5.7 1	3.2.5.7 GCFE LOW-ENERGY DISCRIMINATOR FUNCTION	A. THIS GCFE FUNCTION FAILS B. ANY	A. LOSS OF LOW-ENERGY DISCRIMINATOR OUTPUTS FROM ONE GCFE B. LOSS OF LOW-ENERGY CONTRIBUTION TO TRIGGER GENERATION FROM ONE END OF ONE CRYSTAL C. NONE SIGNIFICANT	4	A. LOSS OF DATA FROM AFFECTED AFEE B. DATA FROM OTHER END OF CRYSTAL (OPPOSITE AFEE) AND ALL DATA FROM ALL OTHER CRYSTALS AND LAYERS AVAILABLE
3.2.5.8 1	3.2.5.8 GCFE HIGH-ENERGY DISCRIMINATOR FUNCTION	A. THIS GCFE FUNCTION FAILS B. ANY	A. LOSS OF HIGH-ENERGY DISCRIMINATOR OUTPUTS FROM ONE GCFE B. LOSS OF HIGH-ENERGY CONTRIBUTION TO TRIGGER GENERATION FROM ONE END OF ONE CRYSTAL C. NONE SIGNIFICANT	4	A. LOSS OF DATA FROM AFFECTED AFEE B. DATA FROM OTHER END OF CRYSTAL (OPPOSITE AFEE) AND ALL DATA FROM ALL OTHER CRYSTALS AND LAYERS AVAILABLE
3.2.5.9 1	3.2.5.9 GCFE LOW-ENERGY X8 TRACK & HOLD FUNCTION	A. THIS GCFE FUNCTION FAILS B. ANY	A. LOSS OF LOW-ENERGY X8 OUTPUTS FROM ONE GCFE B. LOSS OF LOWER HALF OF LOW-ENERGY RANGE OF LONGITUDINAL POSITION INFO FROM ONE END OF ONE CRYSTAL C. NONE SIGNIFICANT	3R	A. LOSS OF DATA FROM AFFECTED AFEE B. DATA FROM OTHER END OF CRYSTAL (OPPOSITE AFEE) AND ALL DATA FROM ALL OTHER CRYSTALS AND LAYERS AVAILABLE
3.2.5.10 1	3.2.5.10 GCFE LOW-ENERGY X1 TRACK & HOLD FUNCTION	A. THIS GCFE FUNCTION FAILS B. ANY	A. LOSS OF LOW-ENERGY X1 OUTPUTS FROM ONE GCFE B. LOSS OF UPPER HALF OF LOW-ENERGY RANGE OF LONGITUDINAL POSITION INFO FROM ONE END OF ONE CRYSTAL C. NONE SIGNIFICANT	3R	A. LOSS OF DATA FROM AFFECTED AFEE B. DATA FROM OTHER END OF CRYSTAL (OPPOSITE AFEE) AND ALL DATA FROM ALL OTHER CRYSTALS AND LAYERS AVAILABLE

FAILURE MODES AND EFFECTS ANALYSIS
GLAST LARGE AREA TELESCOPE CALORIMETER (CAL)

MISSION: CALORIMETER (CAL)
SYSTEM: 3.0 ANALOG FRONT END ELECTRONICS (AFEE)
SUBSYSTEM/INSTRUMENT: 3.2 AFEE LAYER-LEVEL COMPONENTS
COMPONENT: 3.2.5 GLAST CAL FRONT-END ELECTRONICS (GCFE) ASIC
MISSION PHASE: ON-ORBIT

SHEET 8 OF 10
DATE 08/16/2002
PREPARED BY R E Prince
APPROVED BY

FAILURE ID IN 3.2.5	IDENTIFICATION OF ITEM OR FUNCTION	A. FAILURE MODE B. FAILURE CAUSE	FAILURE EFFECTS A. LOCAL OR SUBSYSTEM B. NEXT HIGHER LEVEL - SYSTEM C. END EFFECT – MISSION	SEVERITY CATEGORY	REMARKS A. FAILURE DETECTION METHODS B. COMPENSATING FEATURES/ACTION C. OTHER
3.2.5.11 1	3.2.5.11 GCFE HIGH-ENERGY X8 TRACK & HOLD FUNCTION	A. THIS GCFE FUNCTION FAILS B. ANY	A. LOSS OF HIGH-ENERGY X8 OUTPUTS FROM ONE GCFE B. LOSS OF LOWER HALF OF HIGH-ENERGY RANGE OF LONGITUDINAL POSITION INFO FROM ONE END OF ONE CRYSTAL C. NONE SIGNIFICANT	3R	A. LOSS OF DATA FROM AFFECTED AFEE B. DATA FROM OTHER END OF CRYSTAL (OPPOSITE AFEE) AND ALL DATA FROM ALL OTHER CRYSTALS AND LAYERS AVAILABLE
3.2.5.12 1	3.2.5.12 GCFE HIGH-ENERGY X1 TRACK & HOLD FUNCTION	A. THIS GCFE FUNCTION FAILS B. ANY	A. LOSS OF HIGH-ENERGY X1 OUTPUTS FROM ONE GCFE B. LOSS OF UPPER HALF OF HIGH-ENERGY RANGE OF LONGITUDINAL POSITION INFO FROM ONE END OF ONE CRYSTAL C. NONE SIGNIFICANT	3R	A. LOSS OF DATA FROM AFFECTED AFEE B. DATA FROM OTHER END OF CRYSTAL (OPPOSITE AFEE) AND ALL DATA FROM ALL OTHER CRYSTALS AND LAYERS AVAILABLE
3.2.5.13 1	3.2.5.13 GCFE RANGE-SELECT FUNCTION	A. THIS GCFE FUNCTION FAILS B. ANY	A. LOSS OF SOME OR ALL RANGE-SELECT CAPABILITY FROM ONE GCFE B. PROBABLE LOSS OF ALL USEFUL GCFE DIGITAL AND ANALOG-TO-DIGITAL OUTPUT OF LONGITUDINAL POSITION INFO FROM ONE END OF ONE CRYSTAL. NONE SIGNIFICANT	3R	A. LOSS OF DATA FROM AFFECTED AFEE B. DATA FROM OTHER END OF CRYSTAL (OPPOSITE AFEE) AND ALL DATA FROM ALL OTHER CRYSTALS AND LAYERS AVAILA BLE **C. DEPENDING ON THE FAILURE, POSSIBLY SELF-RANGING OR COMMANDED RANGING MAY BE STILL BEAVAILABLE**
3.2.5.14 1	3.2.5.14 GCFE DIGITAL DATA OUTPUT FUNCTION	A. THIS GCFE FUNCTION FAILS B. ANY	A. LOSS OF DIGITAL DATA OUTPUT FROM ONE GCFE B. LOSS OF GCFE DIGITAL DATA OUTPUT FROM ONE END OF ONE CRYSTAL C. NONE SIGNIFICANT	3R	A. LOSS OF SOME GCFE DIGITAL DATA FROM AFFECTED AFEE B. ANALOG DATA FROM THIS GCFE AND DATA FROM OTHER END OF CRYSTAL (OPPOSITE AFEE) AND ALL DATA FROM ALL OTHER CRYSTALS AND LAYERS AVAILABLE

FAILURE MODES AND EFFECTS ANALYSIS
GLAST LARGE AREA TELESCOPE CALORIMETER (CAL)

MISSION	CALORIMETER (CAL)	SHEET	8 OF 10
SYSTEM	3.0 ANALOG FRONT END ELECTRONICS (AFEE)	DATE	08/16/2002
SUBSYSTEM/INSTRUMENT	3.2 AFEE LAYER-LEVEL COMPONENTS	PREPARED BY	R E Prince
COMPONENT	3.2.5 GLAST CAL FRONT-END ELECTRONICS (GCFE) ASIC	APPROVED BY	
MISSION PHASE	ON-ORBIT		

FAILURE ID IN 3.2.5	IDENTIFICATION OF ITEM OR FUNCTION	A. FAILURE MODE B. FAILURE CAUSE	FAILURE EFFECTS A. LOCAL OR SUBSYSTEM B. NEXT HIGHER LEVEL - SYSTEM C. END EFFECT – MISSION	SEVERITY CATEGORY	REMARKS A. FAILURE DETECTION METHODS B. COMPENSATING FEATURES/ACTION C. OTHER
3.2.5.15 1	3.2.5.15 GCFE ANALOG MUX AND BUFFER OUTPUT FUNCTION	A. THIS GCFE FUNCTION FAILS B. ANY	A. LOSS OF ANALOG OUTPUT FOR SOME OR ALL RANGES-OF ENERGY INPUT FROM ONE GCFE B. PROBABLE LOSS OF A LL OUTPUT OF LONGITUDINAL POSITION INFO FROM ONE END OF ONE CRYSTAL C. NONE SIGNIFICANT	3R	A. LOSS OF DATA FROM AFFECTED AFEE B. DATA FROM OTHER END OF CRYSTAL (OPPOSITE AFEE) AND ALL DATA FROM ALL OTHER CRYSTALS AND LAYERS AVAILABLE **C. DEPENDING ON THE FAILURE, POSSIBLY SELF-RANGING OR COMMANDED RANGING MAY BE STILL BEAVAILABLE**

FAILURE MODES AND EFFECTS ANALYSIS
GLAST LARGE AREA TELESCOPE CALORIMETER (CAL)

MISSION: CALORIMETER (CAL)
SYSTEM: 3.0 ANALOG FRONT END ELECTRONICS (AFEE)
SUBSYSTEM/INSTRUMENT: 3.2 AFEE LAYER-LEVEL COMPONENTS
COMPONENT: 3.2.6 AFEE BOARD DISCRETE COMPONENT NETWORKS
MISSION PHASE: ON-ORBIT

SHEET 9 OF 10
DATE 08/16/2002
PREPARED BY R E Prince
APPROVED BY

FAILURE ID IN 3.2.6	IDENTIFICATION OF ITEM OR FUNCTION	A. FAILURE MODE B. FAILURE CAUSE	FAILURE EFFECTS A. LOCAL OR SUBSYSTEM B. NEXT HIGHER LEVEL - SYSTEM C. END EFFECT – MISSION	SEVERITY CATEGORY	REMARKS A. FAILURE DETECTION METHODS B. COMPENSATING FEATURES/ACTION C. OTHER
3.2.6.1 1	3.2.6.1 LOW-ENERGY (LARGE AREA) PIN PHOTODIODE BIAS R-C NETWORK (1 PER GCFE)	A. RESISTOR OPENS OR SHORTS B. ANY	A. LOSS OF DETECTOR SIGNAL TO GCFE; 50% REDUCTION IN <1.6 GeV ENERGYMEASURED IN ONE CRYSTAL B. DEGRADATION OF LONGITUDINAL POSITION INFO FROM ONE CRYSTAL C. NONE SIGNIFICANT	3R	A. LOSS OF LOW ENERGY DATA FROM AFFECTED DETECTOR MODULE B. DATA FROM OTHER END OF CRYSTAL, DATA FROM CRYSTALS IN ADJACENT LAYERS OF CAL.
3.2.6.1 2		A. CAPACITOR SHORTS B. ANY	A. LOSS OF DETECTOR SIGNAL TO GCFE, 50% REDUCTION IN <1.6 GeV ENERGYMEASURED IN ONE CRYSTAL B. DEGRADATION OF LONGITUDINAL POSITION INFO FROM ONE CRYSTAL C. NONE SIGNIFICANT	3R	A. LOSS OF LOW ENERGY DATA FROM AFFECTED DETECTOR MODULE B. DATA FROM OTHER END OF CRYSTAL, DATA FROM CRYSTALS IN ADJACENT LAYERS OF CAL.
3.2.6.1 3		A. CAPACITOR OPENS B. ANY	A. INCREASED NOISE, DECREASED RESOLUTION IN <1.6 GeV ENERGY MEASURED IN ONE CRYSTAL B. DEGRADATION OF LONGITUDINAL POSITION INFO FROM ONE CRYSTAL C. NONE SIGNIFICANT	4	A. LOW-ENERGY DATA FROM AFFECTED DETECTOR MODULE B. RAISE ZERO-SUPPRESS LLD FOR THIS CHANNEL, DATA FROM OTHER END OF CRYSTAL, DATA FROM CRYSTALS IN ADJACENT LAYERS OF CAL.
3.2.6.2 1	3.2.6.2 HIGH-ENERGY (SMALL AREA) PIN PHOTODIODE BIAS R-C NETWORK (1 PER GCFE)	A. RESISTOR OPENS OR SHORTS B. ANY	A. LOSS OF DETECTOR SIGNAL TO GCFE, 50% REDUCTION IN >1.6 GeV ENERGY MEASURED IN ONE CRYSTAL B. DEGRADATION OF LONGITUDINAL POSITION INFO FROM ONE CRYSTAL C. NONE SIGNIFICANT	3R	A. LOSS OF HIGH ENERGY DATA FROM AFFECTED DETECTOR MODULE B. DATA FROM OTHER END OF CRYSTAL, DATA FROM CRYSTALS IN ADJACENT LAYERS OF CAL.
3.2.6.2 2		A. CAPACITOR SHORTS B. ANY	A. LOSS OF DETECTOR SIGNAL TO GCFE, 50% REDUCTION IN >1.6 GeV ENERGY MEASURED IN ONE CRYSTAL B. DEGRADATION OF LONGITUDINAL POSITION INFO FROM ONE CRYSTAL C. NONE SIGNIFICANT	3R	A. LOSS OF HIGH ENERGY DATA FROM AFFECTED DETECTOR MODULE B. DATA FROM OTHER END OF CRYSTAL, DATA FROM CRYSTALS IN ADJACENT LAYERS OF CAL.

FAILURE MODES AND EFFECTS ANALYSIS
GLAST LARGE AREA TELESCOPE CALORIMETER (CAL)

MISSION: CALORIMETER (CAL)
SYSTEM: 3.0 ANALOG FRONT END ELECTRONICS (AFEE)
SUBSYSTEM/INSTRUMENT: 3.2 AFEE LAYER-LEVEL COMPONENTS
COMPONENT: 3.2.6 AFEE BOARD DISCRETE COMPONENT NETWORKS
MISSION PHASE: ON-ORBIT

SHEET 9 OF 10
DATE 08/16/2002
PREPARED BY R E Prince
APPROVED BY

FAILURE ID IN 3.2.6	IDENTIFICATION OF ITEM OR FUNCTION	A. FAILURE MODE B. FAILURE CAUSE	FAILURE EFFECTS A. LOCAL OR SUBSYSTEM B. NEXT HIGHER LEVEL - SYSTEM C. END EFFECT – MISSION	SEVERITY CATEGORY	REMARKS A. FAILURE DETECTION METHODS B. COMPENSATING FEATURES/ACTION C. OTHER
3.2.6.2 3		A. CAPACITOR OPENS B. ANY	A. INCREASED NOISE, DECREASED RESOLUTION IN >1.6 GeV ENERGY MEASURED IN ONE CRYSTAL B. DEGRADATION OF LONGITUDINAL POSITION INFO FROM ONE CRYSTAL C. NONE SIGNIFICANT	4	A. HIGH ENERGY DATA FROM AFFECTED DETECTOR MODULE B. RAISE ZERO-SUPPRESS LLD FOR THIS CHANNEL, DATA FROM OTHER END OF CRYSTAL, DATA FROM CRYSTALS IN ADJACENT LAYERS OF CAL.
3.2.6.3 1	3.2.6.3 LOW-ENERGY INPUT TO GCFE R-C NETWORK (1 PER GCFE)	A. RESISTOR OR CAPACITOR OPENS OR SHORTS B. ANY	A. LOSS OF DETECTOR SIGNAL TO GCFE; 50% REDUCTION IN <1.6 GeV ENERGYMEASURED IN ONE CRYSTAL B. DEGRADATION OF LONGITUDINAL POSITION INFO FROM ONE CRYSTAL C. NONE SIGNIFICANT	3R	A. LOSS OF LOW ENERGY DATA FROM AFFECTED DETECTOR MODULE B. DATA FROM OTHER END OF CRYSTAL, DATA FROM CRYSTALS IN ADJACENT LAYERS OF CAL.
3.2.6.4 1	3.2.6.4 HIGH-ENERGY INPUT TO GCFE R-C NETWORK (1 PER GCFE)	A. RESISTOR OR CAPACITOR OPENS OR SHORTS B. ANY	A. LOSS OF DETECTOR SIGNAL TO GCFE, 50% REDUCTION IN >1.6 GeV ENERGY MEASURED IN ONE CRYSTAL B. DEGRADATION OF LONGITUDINAL POSITION INFO FROM ONE CRYSTAL C. NONE SIGNIFICANT	3R	A. LOSS OF HIGH ENERGY DATA FROM AFFECTED DETECTOR MODULE B. DATA FROM OTHER END OF CRYSTAL, DATA FROM CRYSTALS IN ADJACENT LAYERS OF CAL.
3.2.6.5 1	3.2.6.5 GCRC LOW-ENERGY DISCRIMINATOR WIRE-OR RESISTOR NETWORK (1 PER AFEE "LAYER")	A. ANY RESISTOR OPENS OR SHORTS B. ANY	A. LOSS OF LOW-ENERGY DISCRIMINATOR OUTPUTS FROM ONE GCRC B. LOSS OF LOW-ENERGY CONTRIBUTION TO TRIGGER GENERATION FROM ONE "LAYER" OF ONE AFEE (ONE END OF ALL 12 CRYSTALS OF ONE LAYER) C. NONE SIGNIFICANT	3R	A. LOSS OF DATA FROM AFFECTED AFEE B. DATA FROM OTHER END OF THE LAYER OF CRYSTALS (OPPOSITE AFEE) AND ALL DATA FROM ALL OTHER LAYERS ARE AVAILABLE
3.2.6.6 1	3.2.6.6 GCRC HIGH-ENERGY DISCRIMINATOR WIRE-OR RESISTOR NETWORK (1 PER AFEE "LAYER"))	A. ANY RESISTOR OPENS OR SHORTS B. ANY	A. LOSS OF HIGH-ENERGY DISCRIMINATOR OUTPUTS FROM ONE GCRC B. LOSS OF HIGH-ENERGY CONTRIBUTION TO TRIGGER GENERATION FROM ONE "LAYER" OF ONE AFEE (ONE END OF ALL 12 CRYSTALS OF ONE LAYER) C. NONE SIGNIFICANT	3R	A. LOSS OF DATA FROM AFFECTED AFEE B. DATA FROM OTHER END OF THE LAYER OF CRYSTALS (OPPOSITE AFEE) AND ALL DATA FROM ALL OTHER LAYERS ARE AVAILABLE

FAILURE MODES AND EFFECTS ANALYSIS
GLAST LARGE AREA TELESCOPE CALORIMETER (CAL)

MISSION: CALORIMETER (CAL)
SYSTEM: 3.0 ANALOG FRONT END ELECTRONICS (AFEE)
SUBSYSTEM/INSTRUMENT: 3.2 AFEE LAYER-LEVEL COMPONENTS
COMPONENT: 3.2.7 OTHER AFEE BOARD DATA COMPONENTS
MISSION PHASE: ON-ORBIT

SHEET 10 OF 10
DATE 08/16/2002
PREPARED BY R E Prince
APPROVED BY

FAILURE ID IN 3.2.7	IDENTIFICATION OF ITEM OR FUNCTION	A. FAILURE MODE B. FAILURE CAUSE	FAILURE EFFECTS A. LOCAL OR SUBSYSTEM B. NEXT HIGHER LEVEL - SYSTEM C. END EFFECT – MISSION	SEVERITY CATEGORY	REMARKS A. FAILURE DETECTION METHODS B. COMPENSATING FEATURES/ACTION C. OTHER
3.2.7.1 1	3.2.7.1 DVDD POWER SHORT TO GROUND	A. SHORT OF FILTER CAP OR OTHER COMPONENTS NOT RELATED TO SPECIFIC A/D FUNCTIONS B. ANY	A. ASSOCIATED FUSE BLOWS; LOSS OF THE AFEE LAYER; FUSE PROTECTS OTHER LAYERS. B. LOSS OF LONGITUDINAL POSITION INFO FROM ONE END OF ONE LAYER OF CRYSTALS ORIENTED IN SAME DIRECTION (12 CRYSTALS TOTAL) C. NONE SIGNIFICANT	3R	A. LOSS OF DATA FROM AFFECTED AFEE B. DATA FROM OTHER END OF LAYER (OPPOSITE AFEE) AND ALL DATA FROM ALL OTHER LAYERS IS AVAILABLE C. SATISFACTORY OPERATION OF A CAL CAN BE OBTAINED FROM ANY 3 AFEEs OR ANY TWO ADJACENT AFEE BOARDS.
3.2.7.2 1	3.2.7.2 ANALOG-TO-DIGITAL CONVERTER AND DISCRETE COMPONENTS (1 PER GCFE)	A. FAILURE TO OPERATE B. ANY	A. LOSS OF ALL ANALOG-TO-DIGITAL OUTPUT FOR ONE GCFE B. LOSS OF ALL OUTPUT OF LONGITUDINAL POSITION INFO FROM ONE END OF ONE CRYSTAL C. NONE SIGNIFICANT	3R	A. LOSS OF DATA FROM AFFECTED AFEE B. DATA FROM OTHER END OF CRYSTAL (OPPOSITE AFEE) AND ALL DATA FROM ALL OTHER CRYSTALS AND LAYERS AVAILABLE
3.2.7.2 2		A. ONE OR TWO OUTPUT BITS INCORRECT B. ANY	A. LOSS OF SOME OR ALL ANALOG-TO-DIGITAL OUTPUT FOR ONE GCFE B. POSSIBLE LOSS OF ALL OUTPUT OF LONGITUDINAL POSITION INFO FROM ONE END OF ONE CRYSTAL C. NONE SIGNIFICANT	3R OR 4	A. DATA FROM AFFECTED CRYSTAL END NOT CONSISTENT WITH OTHER DATA B. DATA FROM OTHER END OF CRYSTAL (OPPOSITE AFEE) AND ALL DATA FROM ALL OTHER CRYSTALS AND LAYERS AVAILABLE C. DEPENDING ON WHICH BIT(S) FAILED, THE CORRECT VALUES POSSIBLY COULD BE INFERRED FROM OTHER DATA.
3.2.7.2 3		A. LOSS OF ACCURACY B. REFERENCE INPUT OR OTHER	A. LOSS OF ACCURACY OF ALL ANALOG-TO-DIGITAL OUTPUT FOR ONE GCFE B. REDUCTION IN VALUE OF ALL OUTPUT OF LONGITUDINAL POSITION INFO FROM ONE END OF ONE CRYSTAL C. NONE SIGNIFICANT	3R OR 4	A. DATA FROM AFFECTED CRYSTAL END NOT CONSISTENT WITH OTHER DATA B. DATA FROM OTHER END OF CRYSTAL (OPPOSITE AFEE) AND ALL DATA FROM ALL OTHER CRYSTALS AND LAYERS AVAILABLE
3.2.7.3 1	3.2.7.3 REFERENCE VOLTAGE SOURCE AND DISCRETE COMPONENTS FOR 12 A/D CONV'S (1 PER AFEE LAYER)	A. FAILURE TO OPERATE B. ANY	A. LOSS OF ALL A/D OUTPUTS FOR 12 GCFE'S (1 AFEE LAYER) B. LOSS OF ALL OUTPUT OF LONGITUDINAL POSITION INFO FROM ONE END OF 12 CRYSTALS (1 AFEE LAYER) C. NONE SIGNIFICANT	3R	A. LOSS OF DATA FROM AFFECTED AFEE B. DATA FROM OTHER END OF THE LAYER OF CRYSTALS (OPPOSITE AFEE) AND ALL DATA FROM ALL OTHER LAYERS ARE AVAILABLE

FAILURE MODES AND EFFECTS ANALYSIS
GLAST LARGE AREA TELESCOPE CALORIMETER (CAL)

MISSION: CALORIMETER (CAL)
SYSTEM: 3.0 ANALOG FRONT END ELECTRONICS (AFEE)
SUBSYSTEM/INSTRUMENT: 3.2 AFEE LAYER-LEVEL COMPONENTS
COMPONENT: 3.2.7 OTHER AFEE BOARD DATA COMPONENTS
MISSION PHASE: ON-ORBIT

SHEET 10 OF 10
DATE 08/16/2002
PREPARED BY R E Prince
APPROVED BY

FAILURE ID IN 3.2.7	IDENTIFICATION OF ITEM OR FUNCTION	A. FAILURE MODE B. FAILURE CAUSE	FAILURE EFFECTS A. LOCAL OR SUBSYSTEM B. NEXT HIGHER LEVEL - SYSTEM C. END EFFECT – MISSION	SEVERITY CATEGORY	REMARKS A. FAILURE DETECTION METHODS B. COMPENSATING FEATURES/ACTION C. OTHER
3.2.7.3 2		A. LOSS OF ACCURACY B. ANY	A. LOSS OF ACCURACY OF ALL A/D OUTPUTS FOR 12 GCFE'S (1 AFEE LAYER) B. LOSS OF ALL OUTPUT OF LONGITUDINAL POSITION INFO FROM ONE END OF 12 CRYSTALS (1 AFEE LAYER) C. NONE SIGNIFICANT	3R	A. DATA FROM AFFECTED AFEE LAYER NOT CONSISTENT WITH OTHER DATA B. DATA FROM OTHER END OF THE LAYER OF CRYSTALS (OPPOSITE AFEE) AND ALL DATA FROM ALL OTHER LAYERS ARE AVAILABLE
3.2.7.4 1	3.2.7.4 CALIBRATION DIG TO ANALOG CONVERTER AND DISCRETE COMPONENTS FOR 12 GCFE'S (1 PER AFEE LAYER)	A. FAILURE TO OPERATE B. ANY	A. LOSS OF COMMANDED CALIBRATION CAPABILITY FOR 12 GCFE'S (1 AFEE LAYER) B. LOSS OF ACCURATE CALIBRATION OF LONGITUDINAL POSITION INFO FROM ONE END OF 12 CRYSTALS (1 AFEE LAYER) C. NONE SIGNIFICANT	3R	A. COMPARE DATA WITH EXPECTED RESULTS, COMPARE WITH DATA FROM OTHER LAYERS B. DATA FROM OTHER END OF THE LAYER OF CRYSTALS (OPPOSITE AFEE) AND ALL DATA FROM ALL OTHER LAYERS ARE AVAILABLE
3.2.7.4 2		A. LOSS OF ACCURACY B. ANY	A. LOSS OF COMMANDED CALIBRATION CAPABILITY FOR 12 GCFE'S (1 AFEE LAYER) B. LOSS OF ACCURATE CALIBRATION OF LONGITUDINAL POSITION INFO FROM ONE END OF 12 CRYSTALS (1 AFEE LAYER) C. NONE SIGNIFICANT	3R	A. COMPARE DATA WITH EXPECTED RESULTS, COMPARE WITH DATA FROM OTHER LAYERS B. DATA FROM OTHER END OF THE LAYER OF CRYSTALS (OPPOSITE AFEE) AND ALL DATA FROM ALL OTHER LAYERS ARE AVAILABLE

APPENDIX D

PIECE-PARTS FAILURE RATES AND ASSEMBLY RELIABILITY PREDICTION FOR A CAL UNIT BASED UPON 100% FUNCTIONALITY

File Name: GLAST_CAL_ Rev C.RPJ
Part Number: System
Date: February 10, 2003
Time: 9:17 AM

Description: Top-level assembly
Environment: SF, SC - Space Flight, Commercial
Temperature, C: 30.00
All Failure Rates in FITs (ie, x10^-9)

CUMULATIVE F.R.s ON THESE SHEETS REPRESENT ONLY ONE INSTANCE OF EACH ASSEMBLY, NOT THE EFFECT OF THE ACTUAL USAGE COUNT OF THESE ASSEMBLIES IN THE CALORIMETER.

Assembly Name	Part Number	Description	Failure Rate, Unit	Failure Rate, Cu
GLAST Calorimeter	System	Top-level assembly		
AFEE Board		4 per CAL		
Board-Level Parts		1 Set per AFEE Board	4.034508	4.034508
Board Layers		4 per AFEE Board		
Board Layer Parts		1 Set per AFEE Board Layer	1.377501	1.377501
Channel Parts (12::12)		12 Sets per AFEE Board Layer	28.680355	344.164261

File Name: GLAST_CAL_ Rev C.RPJ
Assembly Name: Board-Level Parts
Part Number:
Date: February 10, 2003
Time: 9:17 AM

Failure Rate, Unit: 4.034508
Failure Rate, Cum.: 4.034508
Environment: SF, SC - Space Flight, Commercial
Temperature, C: 30.00
All Failure Rates in FITs (ie, x10^-9)

Part Number	Reference Designator	Category	Failure Rate, Item	Quantity	Failure Rate, Ur
4-1589487-2	J1	Connection	1.000000	1.00	1.00000
4-1589487-2	J2	Connection	1.000000	1.00	1.00000
CDR31BX472BKUS	C1	Capacitor	0.023193	1.00	0.02319
M55342K06B100DS	R1	Resistor	0.003772	1.00	0.00377
M55342K06B100DS	R2	Resistor	0.003772	1.00	0.00377
M55342K06B100DS	R3	Resistor	0.003772	1.00	0.00377
311P18-10S10R	R4	Thermistor	1.000000	1.00	1.00000
311P18-10S10R	R24	Thermistor	1.000000	1.00	1.00000

File Name: GLAST_CAL_ Rev C.RPJ
Assembly Name: Board Layer Parts, Sheet 1 of 2
Part Number:
Date: February 10, 2003
Time: 9:17 AM

Failure Rate, Unit: 1.377501
Failure Rate, Cum.: 1.377501
Environment: SF, SC - Space Flight, Commercial
Temperature, C: 30.00
All Failure Rates in FITs (ie, x10^-9)

Part Number	Reference Designator	Category	Failure Rate, Item	Quantity	Failure Rate, Ur
GCRC_VER 5	U0_1	Integrated Circuit	0.010000	1.00	0.01000
MAX5121AEEE	U0_2	Integrated Circuit	0.068000	1.00	0.06800
LM185BYH2.5	U0_3	Semiconductor	0.500000	1.00	0.50000
CDR31BX472BKUS	C0_2	Capacitor	0.023193	1.00	0.02319
CDR31BX472BKUS	C0_3	Capacitor	0.023193	1.00	0.02319
CDR31BX472BKUS	C0_5	Capacitor	0.023193	1.00	0.02319
CDR31BX472BKUS	C0_10	Capacitor	0.023193	1.00	0.02319
CDR31BX472BKUS	C0_11	Capacitor	0.023193	1.00	0.02319
CDR31BX472BKUS	C0_12	Capacitor	0.023193	1.00	0.02319
CDR31BX472BKUS	C0_13	Capacitor	0.023193	1.00	0.02319
CDR31BX472BKUS	C0_14	Capacitor	0.023193	1.00	0.02319
CDR31BX472BKUS	C0_15	Capacitor	0.023193	1.00	0.02319
CDR31BX472BKUS	C0_16	Capacitor	0.023193	1.00	0.02319
CWR11FH685KC	C1_1	Capacitor	0.001284	1.00	0.00128
CWR11FH685KC	C0_6	Capacitor	0.001284	1.00	0.00128
CWR11FH685KC	C0_7	Capacitor	0.001284	1.00	0.00128
CWR11FH685KC	C0_8	Capacitor	0.001284	1.00	0.00128
CWR11FH685KC	C0_9	Capacitor	0.001284	1.00	0.00128
CWR11FH685KC	C00_14	Capacitor	0.001284	1.00	0.00128
CWR11FH685KC	C01_14	Capacitor	0.001284	1.00	0.00128
CWR11FH685KC	C02_14	Capacitor	0.001284	1.00	0.00128
CWR11FH685KC	C07_14	Capacitor	0.001284	1.00	0.00128
CWR11FH685KC	C08_14	Capacitor	0.001284	1.00	0.00128
CWR11FH685KC	C0A_14	Capacitor	0.001284	1.00	0.00128
CWR11FH685KC	C05_15	Capacitor	0.001284	1.00	0.00128
CWR11FH685KC	C07_15	Capacitor	0.001284	1.00	0.00128
CWR11FH685KC	C08_15	Capacitor	0.001284	1.00	0.00128
CWR11FH685KC	C09_15	Capacitor	0.001284	1.00	0.00128
CWR11FH685KC	C0A_15	Capacitor	0.001284	1.00	0.00128
CWR11FH685KC	C0B_15	Capacitor	0.001284	1.00	0.00128
M55342K06B10D0S	R0_29	Resistor	0.006369	1.00	0.00636
M55342K06B10D0S	R0_30	Resistor	0.006369	1.00	0.00636
M55342K06B390GR	R19	Resistor	0.003462	1.00	0.00346
M55342K06B200DS	R0_5	Resistor	0.024070	1.00	0.02407
M55342K06B200DS	R0_6	Resistor	0.024070	1.00	0.02407
M55342K06B200DS	R0_7	Resistor	0.024070	1.00	0.02407
M55342K06B200DS	R0_8	Resistor	0.024070	1.00	0.02407
M55342K06B200DS	R0_9	Resistor	0.024070	1.00	0.02407
M55342K06B200DS	R0_10	Resistor	0.024070	1.00	0.02407
M55342K06B200DS	R0_11	Resistor	0.024070	1.00	0.02407
M55342K06B200DS	R0_12	Resistor	0.024070	1.00	0.02407
M55342K06B200DS	R0_13	Resistor	0.024070	1.00	0.02407
M55342K06B200DS	R0_14	Resistor	0.024070	1.00	0.02407
M55342K06B200DS	R0_15	Resistor	0.024070	1.00	0.02407

File Name: GLAST_CAL_ Rev C.RPJ
Assembly Name: Board Layer Parts, Sheet 2 of 2
Part Number:
Date: February 10, 2003
Time: 9:17 AM

Failure Rate, Unit: 1.377501
Failure Rate, Cum.: 1.377501
Environment: SF, SC - Space Flight, Commercial
Temperature, C: 30.00
All Failure Rates in FITs (ie, x10^-9)

Part Number	Reference Designator	Category	Failure Rate, Item	Quantity	Failure Rate, Ur
M55342K06B200DS	R0_16	Resistor	0.024070	1.00	0.02407
M55342K06B200DS	R0_17	Resistor	0.024070	1.00	0.02407
M55342K06B200DS	R0_18	Resistor	0.024070	1.00	0.02407
M55342K06B200DS	R0_19	Resistor	0.024070	1.00	0.02407
M55342K06B200DS	R0_20	Resistor	0.024070	1.00	0.02407
M55342K06B200DS	R0_21	Resistor	0.024070	1.00	0.02407
M55342K06B200DS	R0_22	Resistor	0.024070	1.00	0.02407
M55342K06B200DS	R0_23	Resistor	0.024070	1.00	0.02407
M55342K06B200DS	R0_24	Resistor	0.024070	1.00	0.02407
M55342K06B200DS	R0_25	Resistor	0.024070	1.00	0.02407
M55342K06B200DS	R0_26	Resistor	0.024070	1.00	0.02407

File Name: GLAST_CAL_ Rev C.RPJ
Assembly Name: Channel Parts
Part Number:
Date: February 10, 2003
Time: 9:17 AM

Failure Rate, Unit: 28.680355
Failure Rate, Cum.: 344.164261
Environment: SF, SC - Space Flight, Commercial
Temperature, C: 30.00
All Failure Rates in FITs (ie, x10^-9)

Part Number	Reference Designator	Category	Failure Rate, Item	Quantity	Failure Rate, Ur
SMALL-AREA PIN PHOTODIODE		Semiconductor	1.000000	1.00	1.00000
LARGE-AREA PIN PHOTODIODE		Semiconductor	1.000000	1.00	1.00000
CONNECTION WIRES		Connection	0.100000	1.00	0.10000
GCFE_VER 7	U00_1	Integrated Circuit	0.010000	1.00	0.01000
MAX145AEUA	U00_2	Integrated Circuit	0.068000	1.00	0.06800
1210B563K2500NXHTM	C00_1	Capacitor	3.005611	1.00	3.00561
1210B563K2500NXHTM	C00_4	Capacitor	3.005611	1.00	3.00561
CDR31BX472BKUS	C00_7	Capacitor	0.023193	1.00	0.02319
CDR31BX472BKUS	C00_8	Capacitor	0.023193	1.00	0.02319
CDR31BX472BKUS	C00_9	Capacitor	0.023193	1.00	0.02319
CDR31BX472BKUS	C00_10	Capacitor	0.023193	1.00	0.02319
CDR31BX472BKUS	C00_11	Capacitor	0.023193	1.00	0.02319
CDR31BX472BKUS	C00_12	Capacitor	0.023193	1.00	0.02319
M55342K06B15E0S	R00_6	Resistor	0.002495	1.00	0.00249
M55342K06B499ES	R00_7	Resistor	0.000633	1.00	0.00063
H1206CPX506J	R00_1	Resistor	0.087211	1.00	0.08721
H1206CPX506J	R00_2	Resistor	0.087211	1.00	0.08721
H1206CPX506J	R00_3	Resistor	0.087211	1.00	0.08721
H1206CPX506J	R00_4	Resistor	0.087211	1.00	0.08721
J00_1	J00_1	Connection	5.000000	1.00	5.00000
J00_2	J00_2	Connection	5.000000	1.00	5.00000
J00_3	J00_3	Connection	5.000000	1.00	5.00000
J00_4	J00_4	Connection	5.000000	1.00	5.00000

APPENDIX E

GLAST CALORIMETER
RELIABILITY BLOCK DIAGRAMS (RBDs)
&
PRELIMINARY RELIABILITY PREDICTIONS

APPENDIX E1

GLAST CALORIMETER
RELIABILITY BLOCK DIAGRAMS (RBDs)
&
PRELIMINARY RELIABILITY PREDICTIONS

SUMMARY FIGURES

CAL UNIT
(4 AFEE BOARDS)

ALL 100% FUNCTIONAL

AFEE BOARD
(4 AFEE LAYERS)

ALL 100% FUNCTIONAL

AFEE LAYER
(12 DETECTOR/CHANNEL CIRCUITS)

ALL 100% FUNCTIONAL

T, YEARS	T, HOURS
0	0
1	8760
2	17520
3	26280
4	35040
5	43800

SUMMARY

CALORIMETER PREDICTED RELIABILITY AND ASSOCIATED CALORIMETER FUNCTIONALITY FOR THIS EXAMPLE:

CALORIMETER UNIT 100% FUNCTIONAL; ALL DETECTOR CHANNELS ARE FULLY OPERATING.

FOR T= 5 YEARS, R(T) = 0.783122

	ONE CAL UNIT		ONE AFEE BOARD		ONE AFEE BOARD LAYER		ONE CHANNEL	
T, HOURS	R(T)	FAILURE RATE (FITs)	R(T)	FAILURE RATE (FITs)	R(T)	FAILURE RATE (FITs)	R(T)	FAILURE RATE (FITs)
0	1.000000	5581.430	1.000000	1395.357	1.000000	347.837	1.000000	28.754
8760	0.952283	5581.430	0.987851	1395.357	0.996958	347.837	0.999748	28.754
17520	0.906842	5581.430	0.975850	1395.357	0.993924	347.837	0.999496	28.754
26280	0.863570	5581.430	0.963994	1395.357	0.990901	347.837	0.999245	28.754
35040	0.822363	5581.430	0.952283	1395.357	0.987886	347.837	0.998993	28.754
43800	**0.783122**	5581.430	0.940714	1395.357	0.984880	347.837	0.998741	28.754

CAL UNIT FUSED AT AFEE BOARD “LAYER” LEVEL. LAST REVISED 23 SEPTEMBER 2002 SHEET 1 OF 4

RBD SUMMARY FIGURE
CALORIMETER UNIT 100% FUNCTIONAL

CAL UNIT
(4 AFEE BOARDS)

3 OF 4 AFEE BOARDS PER CAL UNIT 100% FUNCTIONAL

AFEE BOARD
(4 AFEE LAYERS)

AFEE LAYER
(12 DETECTOR/CHANNEL CIRCUITS)

T, YEARS	T, HOURS
0	0
1	8760
2	17520
3	26280
4	35040
5	43800

SUMMARY

CALORIMETER PREDICTED RELIABILITY AND ASSOCIATED CALORIMETER FUNCTIONALITY FOR THIS EXAMPLE:

3 OF THE 4 AFEE BOARDS ARE FULLY FUNCTIONAL,
1 AFEE BOARD IS NON-FUNCTIONAL.

FOR T= 5 YEARS, R(T) = 0.980541

	ONE CAL UNIT		ONE AFEE BOARD		ONE AFEE BOARD LAYER		ONE CHANNEL	
T, HOURS	R(T)	FAILURE RATE (FITs)	R(T)	FAILURE RATE (FITs)	R(T)	FAILURE RATE (FITs)	R(T)	FAILURE RATE (FITs)
0	1.000000	4.394E-08	1.000000	1395.357	1.000000	347.837	1.000000	28.754
8760	0.999129	196.272	0.987851	1395.357	0.996958	347.837	0.999748	28.754
17520	0.996612	377.061	0.975850	1395.357	0.993924	347.837	0.999496	28.754
26280	0.992590	544.117	0.963994	1395.357	0.990901	347.837	0.999245	28.754
35040	0.987192	698.938	0.952283	1395.357	0.987886	347.837	0.998993	28.754
43800	**0.980541**	842.809	0.940714	1395.357	0.984880	347.837	0.998741	28.754

CAL UNIT FUSED AT AFEE BOARD “LAYER” LEVEL. LAST REVISED 23 SEPTEMBER 2002 SHEET 2 OF 4

RBD SUMMARY FIGURE
CALORIMETER UNIT WITH 3 OF 4 AFEE BOARDS 100% FUNCTIONAL AND 1 AFEE BOARD NON-FUNCTIONAL

CAL UNIT
(4 AFEE BOARDS)

ALL AFEE BOARDS
PARTIALLY FUNCTIONAL

AFEE BOARD
(4 AFEE LAYERS)

3 OF 4 LAYERS 100%
FUNCTIONAL

AFEE LAYER
(12 DETECTOR/CHANNEL
CIRCUITS)

T, YEARS	T, HOURS
0	0
1	8760
2	17520
3	26280
4	35040
5	43800

SUMMARY

CALORIMETER PREDICTED RELIABILITY AND ASSOCIATED CALORIMETER FUNCTIONALITY FOR THIS EXAMPLE:

ALL 4 AFEE BOARDS ARE PARTIALLY FUNCTIONAL: EACH BOARD HAS 3 OF 4 LAYERS FULLY FUNCTIONAL AND 1 LAYER NON-FUNCTIONAL.

FOR T= 5 YEARS, R(T) = 0.993935

	ONE CAL UNIT		ONE AFEE BOARD		ONE AFEE BOARD LAYER		ONE CHANNEL	
T, HOURS	R(T)	FAILURE RATE (FITs)	R(T)	FAILURE RATE (FITs)	R(T)	FAILURE RATE (FITs)	R(T)	FAILURE RATE (FITs)
0	1.000000	16.045	1.000000	4.011	1.000000	347.837	1.000000	28.754
8760	0.999638	66.382	0.999910	16.596	0.996958	347.837	0.999748	28.754
17520	0.998841	115.668	0.999710	28.917	0.993924	347.837	0.999496	28.754
26280	0.997618	163.935	0.999404	40.984	0.990901	347.837	0.999245	28.754
35040	0.995979	211.213	0.998993	52.803	0.987886	347.837	0.998993	28.754
43800	**0.993935**	257.534	0.998480	64.383	0.984880	347.837	0.998741	28.754

CAL UNIT FUSED AT AFEE BOARD “LAYER” LEVEL. LAST REVISED 23 SEPTEMBER 2002 SHEET 3 OF 4

RBD SUMMARY FIGURE
CALORIMETER UNIT WITH 4 OF 4 AFEE BOARDS PARTIALLY FUNCTIONAL, EACH BOARD CONTAINING 3 FUNCTIONAL LAYERS AND 1 NON-FUNCTIONAL LAYER

T, YEARS	T, HOURS
0	0
1	8760
2	17520
3	26280
4	35040
5	43800

CAL UNIT
(4 AFEE BOARDS)

ALL AFEE BOARDS
PARTIALLY FUNCTIONAL

AFEE BOARD
(4 AFEE LAYERS)

ALL LAYERS PARTIALLY
FUNCTIONAL

AFEE LAYER
(12 DETECTOR/CHANNEL
CIRCUITS)

10 OF 12 PER LAYER
FUNCTIONAL

SUMMARY

CALORIMETER PREDICTED RELIABILITY AND ASSOCIATED CALORIMETER FUNCTIONALITY FOR THIS EXAMPLE:

ALL 4 AFEE BOARDS ARE PARTIALLY FUNCTIONAL BECAUSE EACH BOARD HAS EACH LAYER ONLY PARTIALLY FUNCTIONAL: EACH BOARD HAS ONLY 10 OF THE 12 CHANNELS PER LAYER OPERATING.

FOR T= 5 YEARS, R(T) = 0.997339

	ONE CAL UNIT		ONE AFEE BOARD		ONE AFEE BOARD LAYER		ONE CHANNEL	
T, HOURS	R(T)	FAILURE RATE (FITs)	R(T)	FAILURE RATE (FITs)	R(T)	FAILURE RATE (FITs)	R(T)	FAILURE RATE (FITs)
0	1.000000	60.682	1.000000	15.170	1.000000	2.790	1.000000	28.754
8760	0.999469	60.701	0.999867	15.175	0.999976	2.791	0.999748	28.754
17520	0.998937	60.759	0.999734	15.190	0.999951	2.795	0.999496	28.754
26280	0.998405	60.854	0.999601	15.213	0.999927	2.801	0.999245	28.754
35040	0.997872	60.987	0.999468	15.247	0.999902	2.809	0.998993	28.754
43800	**0.997339**	61.157	0.999334	15.289	0.999877	2.819	0.998741	28.754

CAL UNIT FUSED AT AFEE BOARD “LAYER” LEVEL. LAST REVISED 23 SEPTEMBER 2002 SHEET 4 OF 4

RBD SUMMARY FIGURE
CALORIMETER UNIT WITH 4 OF 4 AFEE BOARDS PARTIALLY FUNCTIONAL, EACH BOARD AND LAYER CONTAINING 10 OPERATING CHANNELS OF 12 TOTAL PER AFEE BOARD LAYER

APPENDIX E2

GLAST CALORIMETER
RELIABILITY BLOCK DIAGRAMS (RBDs)
&
PRELIMINARY RELIABILITY PREDICTIONS
FOR
CALORIMETER UNIT 100% FUNCTIONAL

Diagram Calculation Results

File Name: GLAST_CAL_ Rev C.RPJ
Configuration: RBD - CAL UNIT (100% FUNCTIONAL)
Date: 2/10/03
Time: 11:15 AM

Results At: (Hours) 43800.0
Reliability: 0.78437935
Unreliability: 0.21562065
Failure Rate: 5544.806216
All Failure Rates in FITs (ie, x10^-9)

Time (Hours)		Reliability	Unreliability	Failure Rate
.00		1.00000000	0.00000000	5544.80621
4380.00		0.97600629	0.02399371	5544.80621
8760.00		0.95258827	0.04741173	5544.80621
13140.00		0.92973214	0.07026786	5544.80622
17520.00		0.90742442	0.09257558	5544.80621
21900.00		0.88565193	0.11434807	5544.80623
26280.00		0.86440186	0.13559814	5544.80621
30660.00		0.84366165	0.15633835	5544.80621
35040.00		0.82341907	0.17658093	5544.80622
39420.00		0.80366219	0.19633781	5544.80622
43800.00		0.78437935	0.21562065	5544.80621

Date: 2/10/03
Time: 11:15 AM

RBD - CAL UNIT (100% FUNCTIONAL
All Failure Rates in FITs (ie, x10^-9)

GLAST CALORIMETER

ONE CALORIMETER UNIT

(4 AFEE BOARDS)

(FUSED AT BOARD LEVEL IN TEM)

(COMPLETELY 100% FUNCTIONAL)

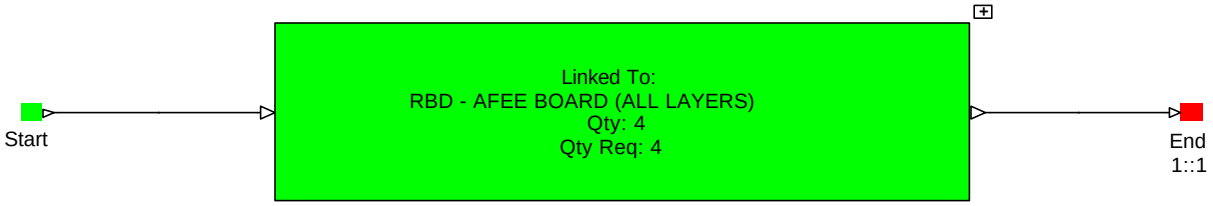

-- RBD Calculation Results --
Calculation Method: Analytical

-- Results at time 43800.00 --
Reliability: 0.784379
Unreliability: 0.215621
Failure Rate: 5544.806216

GLAST CALORIMETER
Diagram Calculation Results

File Name: GLAST_CAL_ Rev C.RPJ
Configuration: RBD - AFEE BOARD (ALL LAYERS)
Date: 2/10/03
Time: 11:11 AM

Results At: (Hours) 43800.0
Reliability: 0.94109082
Unreliability: 0.05890918
Failure Rate: 1386.201554
All Failure Rates in FITs (ie, x10^-9)

Time (Hours)		Reliability	Unreliability	Failure Rate
.00		1.00000000	0.00000000	1386.201554
4380.00		0.99394683	0.00605317	1386.201554
8760.00		0.98793030	0.01206970	1386.201554
13140.00		0.98195020	0.01804980	1386.201556
17520.00		0.97600629	0.02399371	1386.201554
21900.00		0.97009836	0.02990164	1386.201559
26280.00		0.96422619	0.03577381	1386.201554
30660.00		0.95838956	0.04161044	1386.201553
35040.00		0.95258827	0.04741173	1386.201556
39420.00		0.94682209	0.05317791	1386.201556
43800.00		0.94109082	0.05890918	1386.201554

Date: 2/10/03
Time: 11:15 AM

RBD - CAL UNIT (100% FUNCTIONAL
All Failure Rates in FITs (ie, x10^-9)

GLAST CALORIMETER

AFEE BOARD

(FUSED AT BOARD LEVEL IN TEM)

(COMPLETELY 100% FUNCTIONAL)

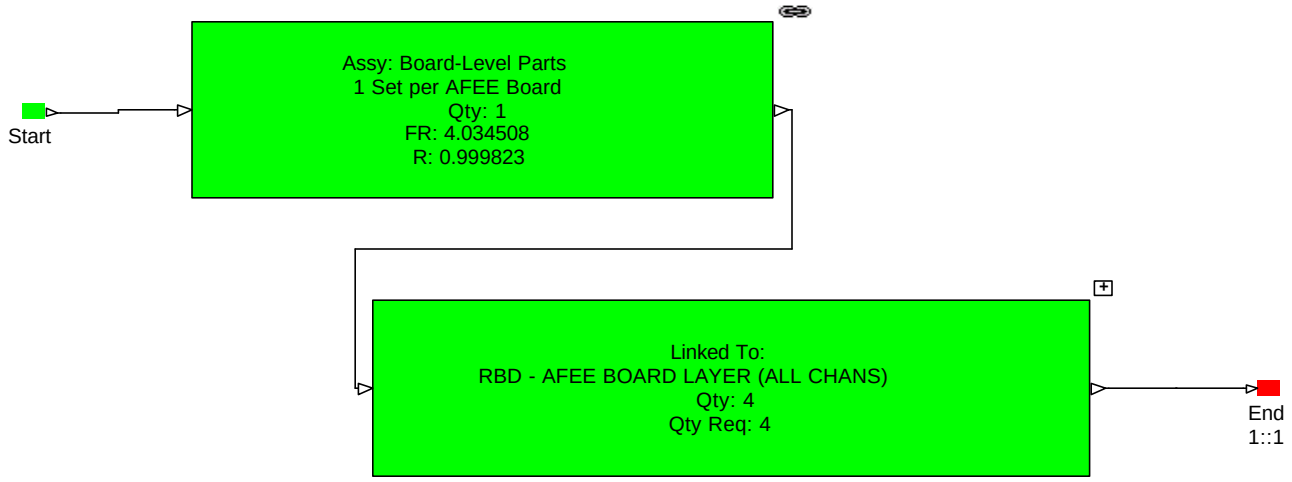

-- RBD Calculation Results --
Calculation Method: Analytical

-- Results at time 43800.00 --
Reliability: 0.941091
Unreliability: 0.058909
Failure Rate: 1386.201554

GLAST CALORIMETER
Diagram Calculation Results

File Name: GLAST_CAL_ Rev C.RPJ
Configuration: RBD - AFEE BOARD LAYER (ALL CHANS)
Date: 2/10/03
Time: 11:13 AM

Results At: (Hours) 43800.0
Reliability: 0.98497923
Unreliability: 0.01502077
Failure Rate: 345.541762
All Failure Rates in FITs (ie, x10^-9)

Time (Hours)		Reliability	Unreliability	Failure Rate
.00		1.00000000	0.00000000	345.541762
4380.00		0.99848767	0.00151233	345.541761
8760.00		0.99697763	0.00302237	345.541762
13140.00		0.99546987	0.00453013	345.541762
17520.00		0.99396440	0.00603560	345.541761
21900.00		0.99246120	0.00753880	345.541763
26280.00		0.99096027	0.00903973	345.541762
30660.00		0.98946161	0.01053839	345.541761
35040.00		0.98796522	0.01203478	345.541762
39420.00		0.98647109	0.01352891	345.541762
43800.00		0.98497923	0.01502077	345.541762

Date: 2/10/03
Time: 11:15 AM

RBD - CAL UNIT (100% FUNCTIONAL
All Failure Rates in FITs (ie, x10^-9)

GLAST CALORIMETER

AFEE BOARD LAYER

(FUSED AT BOARD LEVEL IN TEM)

(COMPLETELY 100% FUNCTIONAL)

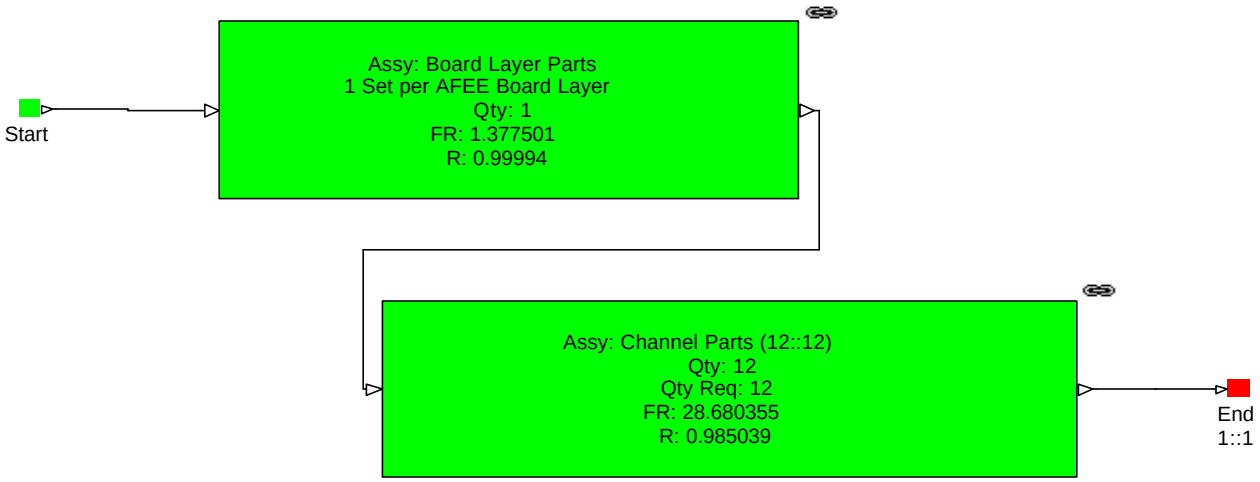

"FR" is Failure Rate of an individual unit.

"R" is Reliability of entire 12::12 Block.

-- RBD Calculation Results --
Calculation Method: Analytical

-- Results at time 43800.00 --
Reliability: 0.984979
Unreliability: 0.015021
Failure Rate: 345.541762

APPENDIX E3

GLAST CALORIMETER
RELIABILITY BLOCK DIAGRAMS (RBDs)
&
PRELIMINARY RELIABILITY PREDICTIONS
FOR
CALORIMETER UNIT WITH 3 OF 4 AFEE BOARDS 100% FUNCTIONAL AND 1 AFEE BOARD NON-FUNCTIONAL

Diagram Calculation Results

File Name: GLAST_CAL_ Rev C.RPJ
Configuration: RBD - CAL UNIT (3 OF 4 BOARDS FUNCTIONAL)
Date: 2/10/03
Time: 11:15 AM

Results At: (Hours) 43800.0
Reliability: 0.98077758
Unreliability: 0.01922242
Failure Rate: 832.750070
All Failure Rates in FITs (ie, x10^-9)

Time (Hours)		Reliability	Unreliability	Failure Rate
.00		1.00000000	0.00000000	.000000
4380.00		0.99978193	0.00021807	98.895048
8760.00		0.99913994	0.00086006	193.756610
13140.00		0.99809195	0.00190805	284.824890
17520.00		0.99665532	0.00334468	372.321350
21900.00		0.99484683	0.00515317	456.450588
26280.00		0.99268275	0.00731725	537.401821
30660.00		0.99017880	0.00982120	615.350402
35040.00		0.98735021	0.01264979	690.458971
39420.00		0.98421172	0.01578828	762.878670
43800.00		0.98077758	0.01922242	832.750070

GLAST CALORIMETER

ONE CALORIMETER UNIT

(4 AFEE BOARDS)

(FUSED AT BOARD LEVEL IN TEM)

(3 OF 4 AFEE BOARDS COMPLETELY FUNCTIONAL)

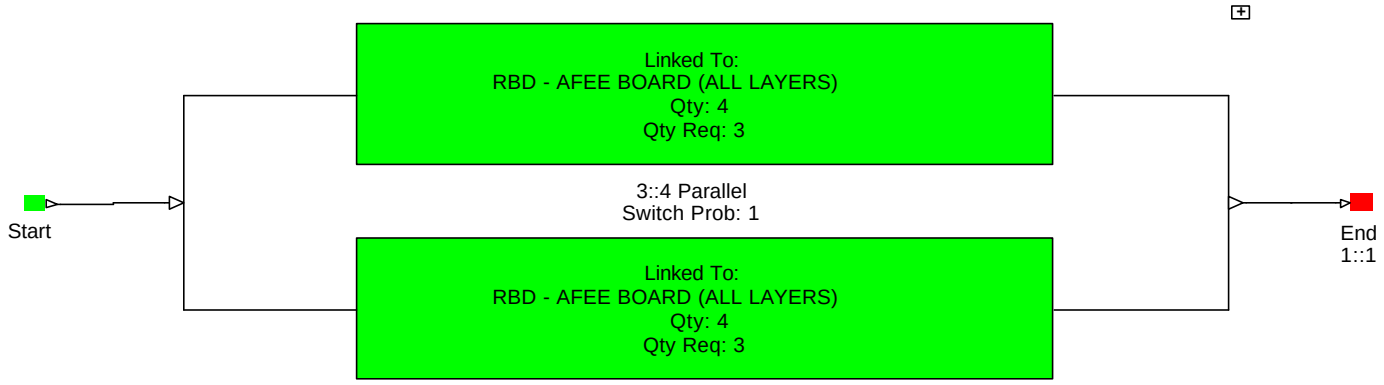

-- RBD Calculation Results --
Calculation Method: Analytical

-- Results at time 43800.00 --
Reliability: 0.980778
Unreliability: 0.019222
Failure Rate: 832.75007

Relex Software Report

GLAST CALORIMETER
Diagram Calculation Results

File Name: GLAST_CAL_ Rev C.RPJ
Configuration: RBD - AFEE BOARD (ALL LAYERS)
Date: 2/10/03
Time: 11:11 AM

Results At: (Hours) 43800.0
Reliability: 0.94109082
Unreliability: 0.05890918
Failure Rate: 1386.201554
All Failure Rates in FITs (ie, x10^-9)

Time (Hours)		Reliability	Unreliability	Failure Rate
.00		1.00000000	0.00000000	1386.201554
4380.00		0.99394683	0.00605317	1386.201554
8760.00		0.98793030	0.01206970	1386.201554
13140.00		0.98195020	0.01804980	1386.201556
17520.00		0.97600629	0.02399371	1386.201554
21900.00		0.97009836	0.02990164	1386.201559
26280.00		0.96422619	0.03577381	1386.201554
30660.00		0.95838956	0.04161044	1386.201553
35040.00		0.95258827	0.04741173	1386.201556
39420.00		0.94682209	0.05317791	1386.201556
43800.00		0.94109082	0.05890918	1386.201554

Date: 2/10/03
Time: 11:15 AM

RBD - CAL UNIT (3 OF 4 BOARDS FUNCTIONAL
All Failure Rates in FITs (ie, x10^-9)

GLAST CALORIMETER

AFEE BOARD

(FUSED AT BOARD LEVEL IN TEM)

(COMPLETELY 100% FUNCTIONAL)

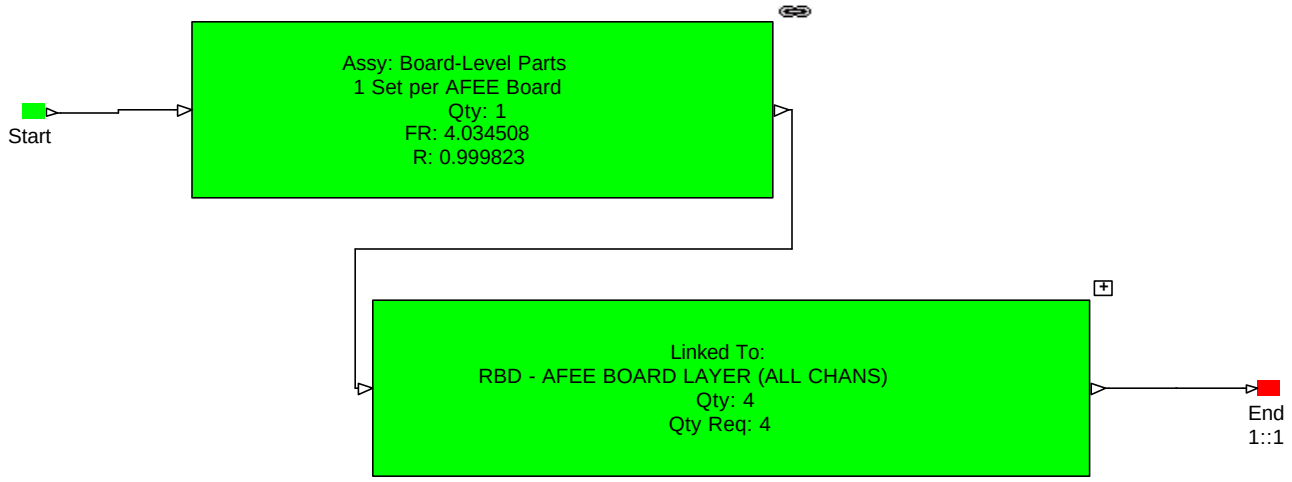

-- RBD Calculation Results --
Calculation Method: Analytical

-- Results at time 43800.00 --
Reliability: 0.941091
Unreliability: 0.058909
Failure Rate: 1386.201554

Relex Software Report

GLAST CALORIMETER
Diagram Calculation Results

File Name: GLAST_CAL_ Rev C.RPJ
Configuration: RBD - AFEE BOARD LAYER (ALL CHANS)
Date: 2/10/03
Time: 11:13 AM

Results At: (Hours) 43800.0
Reliability: 0.98497923
Unreliability: 0.01502077
Failure Rate: 345.541762
All Failure Rates in FITs (ie, x10^-9)

Time (Hours)		Reliability	Unreliability	Failure Rate
.00		1.00000000	0.00000000	345.541762
4380.00		0.99848767	0.00151233	345.541761
8760.00		0.99697763	0.00302237	345.541762
13140.00		0.99546987	0.00453013	345.541762
17520.00		0.99396440	0.00603560	345.541761
21900.00		0.99246120	0.00753880	345.541763
26280.00		0.99096027	0.00903973	345.541762
30660.00		0.98946161	0.01053839	345.541761
35040.00		0.98796522	0.01203478	345.541762
39420.00		0.98647109	0.01352891	345.541762
43800.00		0.98497923	0.01502077	345.541762

Date: 2/10/03
Time: 11:15 AM

RBD - CAL UNIT (3 OF 4 BOARDS FUNCTIONAL

All Failure Rates in FITs (ie, x10^-9)

GLAST CALORIMETER

AFEE BOARD LAYER

(FUSED AT BOARD LEVEL IN TEM)

(COMPLETELY 100% FUNCTIONAL)

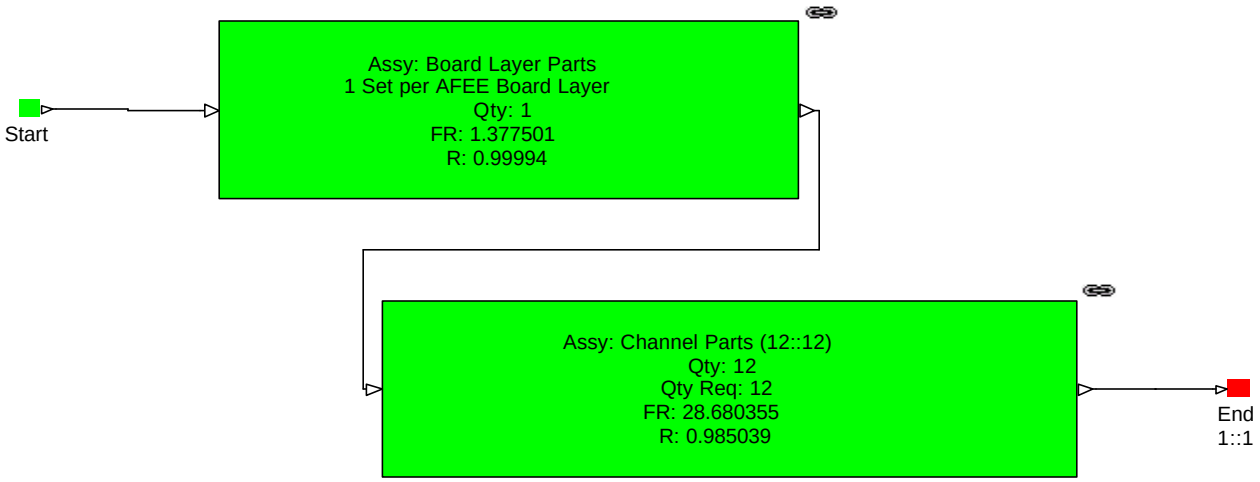

"FR" is Failure Rate of an individual unit.

"R" is Reliability of entire 12::12 Block.

-- RBD Calculation Results --
Calculation Method: Analytical

-- Results at time 43800.00 --
Reliability: 0.984979
Unreliability: 0.015021
Failure Rate: 345.541762

APPENDIX E4

GLAST CALORIMETER
RELIABILITY BLOCK DIAGRAMS (RBDs)
&
PRELIMINARY RELIABILITY PREDICTIONS
FOR

CALORIMETER UNIT WITH 4 OF 4 AFEE BOARDS PARTIALLY FUNCTIONAL, EACH BOARD CONTAINING 3 FUNCTIONAL LAYERS AND 1 NON-FUNCTIONAL LAYER

Diagram Calculation Results

File Name: GLAST_CAL_ Rev C.RPJ
Configuration: RBD - CAL UNIT (3 OF 4 LAYERS FUNCTIONAL)
Date: 2/10/03
Time: 11:17 AM

Results At: (Hours) 43800.0
Reliability: 0.99400057
Unreliability: 0.00599943
Failure Rate: 254.530167
All Failure Rates in FITs (ie, x10^-9)

Time (Hours)		Reliability	Unreliability	Failure Rate
.00		1.00000000	0.00000000	16.13803
4380.00		0.99987454	0.00012546	41.10822
8760.00		0.99964034	0.00035966	65.81662
13140.00		0.99929860	0.00070140	90.26728
17520.00		0.99885056	0.00114944	114.46421
21900.00		0.99829747	0.00170253	138.41129
26280.00		0.99764057	0.00235943	162.11234
30660.00		0.99688114	0.00311886	185.57113
35040.00		0.99602046	0.00397954	208.79131
39420.00		0.99505984	0.00494016	231.77648
43800.00		0.99400057	0.00599943	254.53016

GLAST CALORIMETER

ONE CALORIMETER UNIT

(4 AFEE BOARDS)

(FUSED AT BOARD LEVEL IN TEM)

(4 OF 4 AFEE BOARDS PARTIALLY FUNCTIONAL BECAUSE
3 OF 4 LAYERS ON EACH AFEE BOARD COMPLETELY FUNCTIONAL)

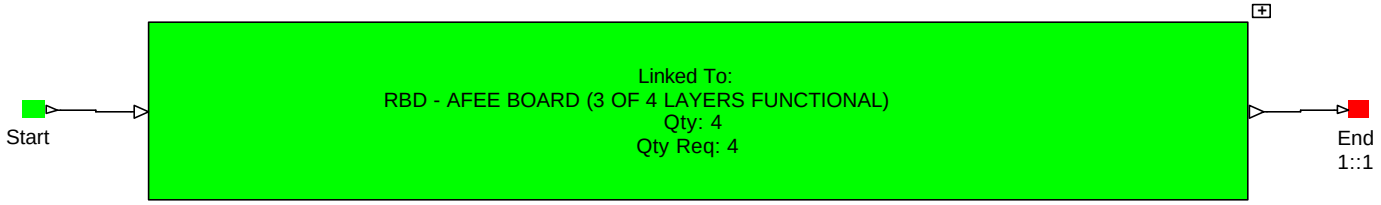

-- RBD Calculation Results --
Calculation Method: Analytical

-- Results at time 43800.00 --
Reliability: 0.994001
Unreliability: 0.005999
Failure Rate: 254.530167

GLAST CALORIMETER
Diagram Calculation Results

File Name: GLAST_CAL_ Rev C.RPJ
Configuration: RBD - AFEE BOARD (3 OF 4 LAYERS FUNCTIONAL)
Date: 2/10/03
Time: 11:10 AM

Results At: (Hours) 43800.0
Reliability: 0.99849676
Unreliability: 0.00150324
Failure Rate: 63.632542
All Failure Rates in FITs (ie, x10^-9)

Time (Hours)		Reliability	Unreliability	Failure Rate
.00		1.00000000	0.00000000	4.034508
4380.00		0.99996863	0.00003137	10.277056
8760.00		0.99991007	0.00008993	16.454155
13140.00		0.99982460	0.00017540	22.566822
17520.00		0.99971252	0.00028748	28.616053
21900.00		0.99957409	0.00042591	34.602822
26280.00		0.99940962	0.00059038	40.528087
30660.00		0.99921937	0.00078063	46.392783
35040.00		0.99900363	0.00099637	52.197828
39420.00		0.99876267	0.00123733	57.944121
43800.00		0.99849676	0.00150324	63.632542

Date: 2/10/03
Time: 11:17 AM

RBD - CAL UNIT (3 OF 4 LAYERS FUNCTIONAL

All Failure Rates in FITs (ie, x10^-9)

GLAST CALORIMETER

AFEE BOARD

(FUSED AT BOARD LEVEL IN TEM)

(3 OF 4 LAYERS FUNCTIONAL)

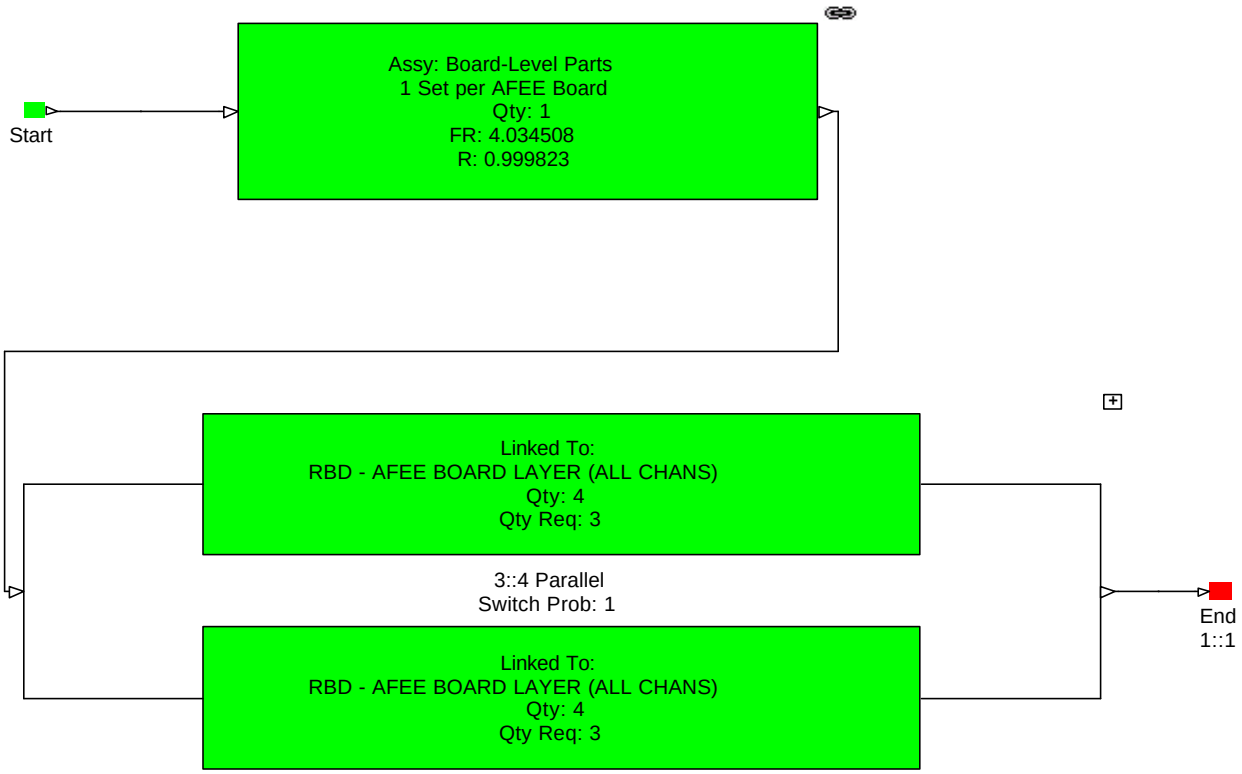

-- RBD Calculation Results --
Calculation Method: Analytical

-- Results at time 43800.00 --
Reliability: 0.998497
Unreliability: 0.001503
Failure Rate: 63.632542

Relex Software Report

GLAST CALORIMETER
Diagram Calculation Results

File Name: GLAST_CAL_ Rev C.RPJ
Configuration: RBD - AFEE BOARD LAYER (ALL CHANS)
Date: 2/10/03
Time: 11:13 AM

Results At: (Hours) 43800.0
Reliability: 0.98497923
Unreliability: 0.01502077
Failure Rate: 345.541762
All Failure Rates in FITs (ie, x10^-9)

Time (Hours)		Reliability	Unreliability	Failure Rate
.00		1.00000000	0.00000000	345.541762
4380.00		0.99848767	0.00151233	345.541761
8760.00		0.99697763	0.00302237	345.541762
13140.00		0.99546987	0.00453013	345.541762
17520.00		0.99396440	0.00603560	345.541761
21900.00		0.99246120	0.00753880	345.541763
26280.00		0.99096027	0.00903973	345.541762
30660.00		0.98946161	0.01053839	345.541761
35040.00		0.98796522	0.01203478	345.541762
39420.00		0.98647109	0.01352891	345.541762
43800.00		0.98497923	0.01502077	345.541762

Date: 2/10/03
Time: 11:17 AM

RBD - CAL UNIT (3 OF 4 LAYERS FUNCTIONAL

All Failure Rates in FITs (ie, x10^-9)

GLAST CALORIMETER

AFEE BOARD LAYER

(FUSED AT BOARD LEVEL IN TEM)

(COMPLETELY 100% FUNCTIONAL)

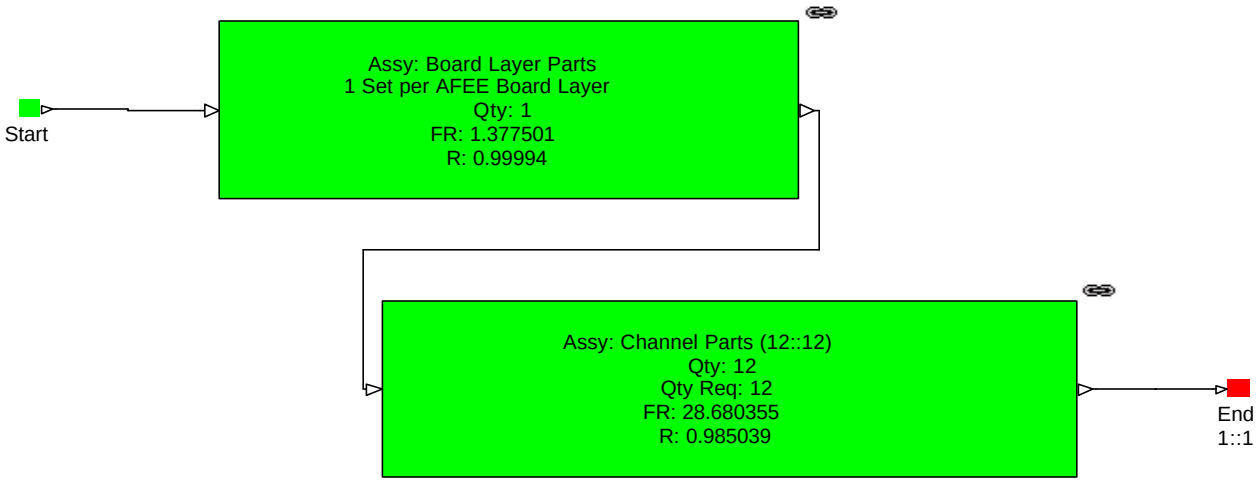

"FR" is Failure Rate of an individual unit.

"R" is Reliability of entire 12::12 Block.

-- RBD Calculation Results --
Calculation Method: Analytical

-- Results at time 43800.00 --
Reliability: 0.984979
Unreliability: 0.015021
Failure Rate: 345.541762

APPENDIX E5

GLAST CALORIMETER
RELIABILITY BLOCK DIAGRAMS (RBDs)
&
PRELIMINARY RELIABILITY PREDICTIONS
FOR

CALORIMETER UNIT WITH 4 OF 4 AFEE BOARDS PARTIALLY FUNCTIONAL, EACH BOARD AND LAYER CONTAINING 10 OPERATING CHANNELS OF 12 TOTAL PER AFEE BOARD LAYER

File Name: GLAST_CAL_ Rev C.RPJ
Configuration: RBD - CAL UNIT (10 OF 12 CHANS FUNCTIONAL)
Date: 2/10/03
Time: 11:14 AM

Results At: (Hours) 43800.0
Reliability: 0.99832230
Unreliability: 0.00167770
Failure Rate: 38.649418
All Failure Rates in FITs (ie, x10^-9)

Time (Hours)		Reliability	Unreliability	Failure Rate
.00		1.00000000	0.00000000	38.17804
4380.00		0.99983279	0.00016721	38.18281
8760.00		0.99966556	0.00033444	38.19711
13140.00		0.99949828	0.00050172	38.22088
17520.00		0.99933090	0.00066910	38.25409
21900.00		0.99916338	0.00083662	38.29670
26280.00		0.99899569	0.00100431	38.34868
30660.00		0.99882777	0.00117223	38.40997
35040.00		0.99865960	0.00134040	38.48055
39420.00		0.99849112	0.00150888	38.56038
43800.00		0.99832230	0.00167770	38.64941

GLAST CALORIMETER

ONE CALORIMETER UNIT

(4 AFEE BOARDS)

(FUSED AT BOARD LEVEL IN TEM)

(4 OF 4 AFEE BOARDS PARTIALLY FUNCTIONAL BECAUSE,
4 OF 4 LAYERS ON EACH AFEE BOARD PARTIALLY FUNCTIONAL BECAUSE ONLY
10 OF 12 CHANNELS ON EACH AFEE BOARD LAYER COMPLETELY FUNCTIONAL)

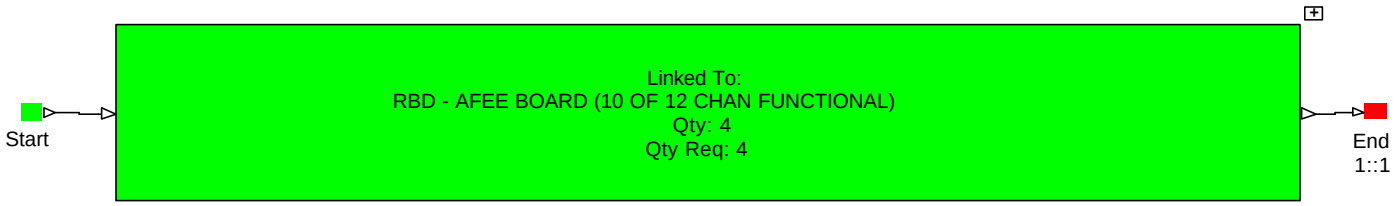

-- RBD Calculation Results --
Calculation Method: Analytical

-- Results at time 43800.00 --
Reliability: 0.998322
Unreliability: 0.001678
Failure Rate: 38.649418

GLAST CALORIMETER
Diagram Calculation Results

File Name: GLAST_CAL_ Rev C.RPJ
Configuration: RBD - AFEE BOARD (10 OF 12 CHAN FUNCTIONAL)
Date: 2/10/03
Time: 11:09 AM

Results At: (Hours) 43800.0
Reliability: 0.99958031
Unreliability: 0.00041969
Failure Rate: 9.662355
All Failure Rates in FITs (ie, x10^-9)

Time (Hours)		Reliability	Unreliability	Failure Rate
.00		1.00000000	0.00000000	9.544511
4380.00		0.99995819	0.00004181	9.545704
8760.00		0.99991638	0.00008362	9.549278
13140.00		0.99987455	0.00012545	9.555221
17520.00		0.99983268	0.00016732	9.563523
21900.00		0.99979078	0.00020922	9.574177
26280.00		0.99974883	0.00025117	9.587170
30660.00		0.99970681	0.00029319	9.602495
35040.00		0.99966473	0.00033527	9.620140
39420.00		0.99962257	0.00037743	9.640096
43800.00		0.99958031	0.00041969	9.662355

Date: 2/10/03
Time: 11:14 AM

RBD - CAL UNIT (10 OF 12 CHANS FUNCTIONAL
All Failure Rates in FITs (ie, x10^-9)

GLAST CALORIMETER

AFEE BOARD

(FUSED AT BOARD LEVEL IN TEM)

(10 OF 12 CHANNELS FUNCTIONAL)

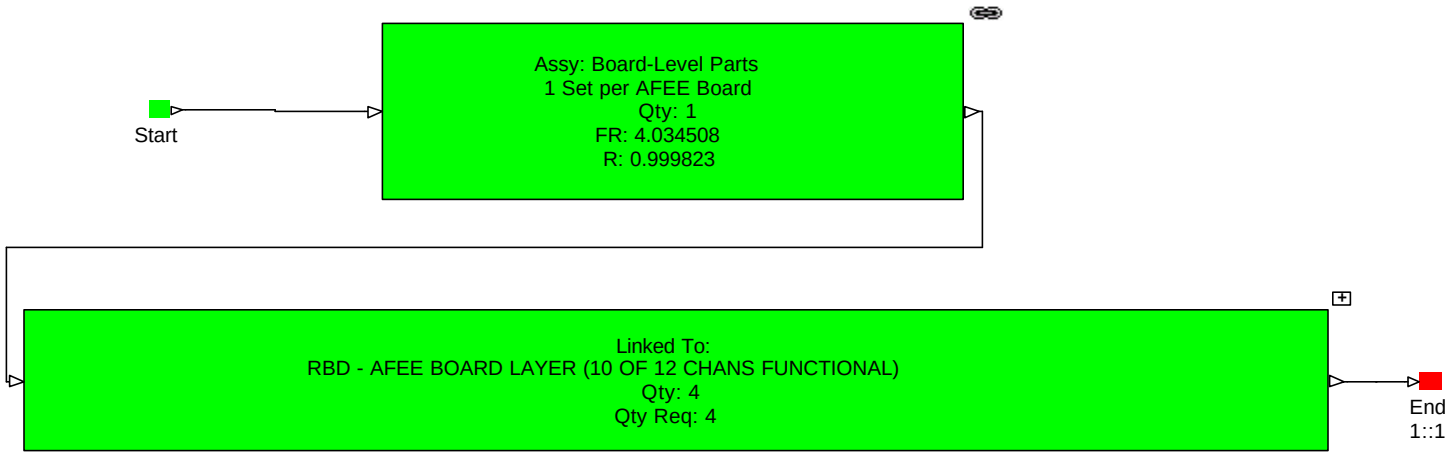

-- RBD Calculation Results --
Calculation Method: Analytical

-- Results at time 43800.00 --
Reliability: 0.99958
Unreliability: 4.19688E-4
Failure Rate: 9.662355

Relex Software Report

GLAST CALORIMETER
Diagram Calculation Results

File Name: GLAST_CAL_ Rev C.RPJ
Configuration: RBD - AFEE BOARD LAYER (10 OF 12 CHANS FUNCTIONAL)
Date: 2/10/03
Time: 11:12 AM

Results At: (Hours) 43800.0
Reliability: 0.99993924
Unreliability: 0.00006076
Failure Rate: 1.406962
All Failure Rates in FITs (ie, x10^-9)

Time (Hours)		Reliability	Unreliability	Failure Rate
.00		1.00000000	0.00000000	1.377501
4380.00		0.99999397	0.00000603	1.377799
8760.00		0.99998793	0.00001207	1.378692
13140.00		0.99998189	0.00001811	1.380178
17520.00		0.99997584	0.00002416	1.382254
21900.00		0.99996978	0.00003022	1.384917
26280.00		0.99996371	0.00003629	1.388166
30660.00		0.99995762	0.00004238	1.391997
35040.00		0.99995151	0.00004849	1.396408
39420.00		0.99994539	0.00005461	1.401397
43800.00		0.99993924	0.00006076	1.406962

Date: 2/10/03
Time: 11:14 AM

RBD - CAL UNIT (10 OF 12 CHANS FUNCTIONAL

All Failure Rates in FITs (ie, x10^-9)

GLAST CALORIMETER

AFEE BOARD LAYER

(FUSED AT BOARD LEVEL IN TEM)

(10 OF 12 CHANNELS FUNCTIONAL)

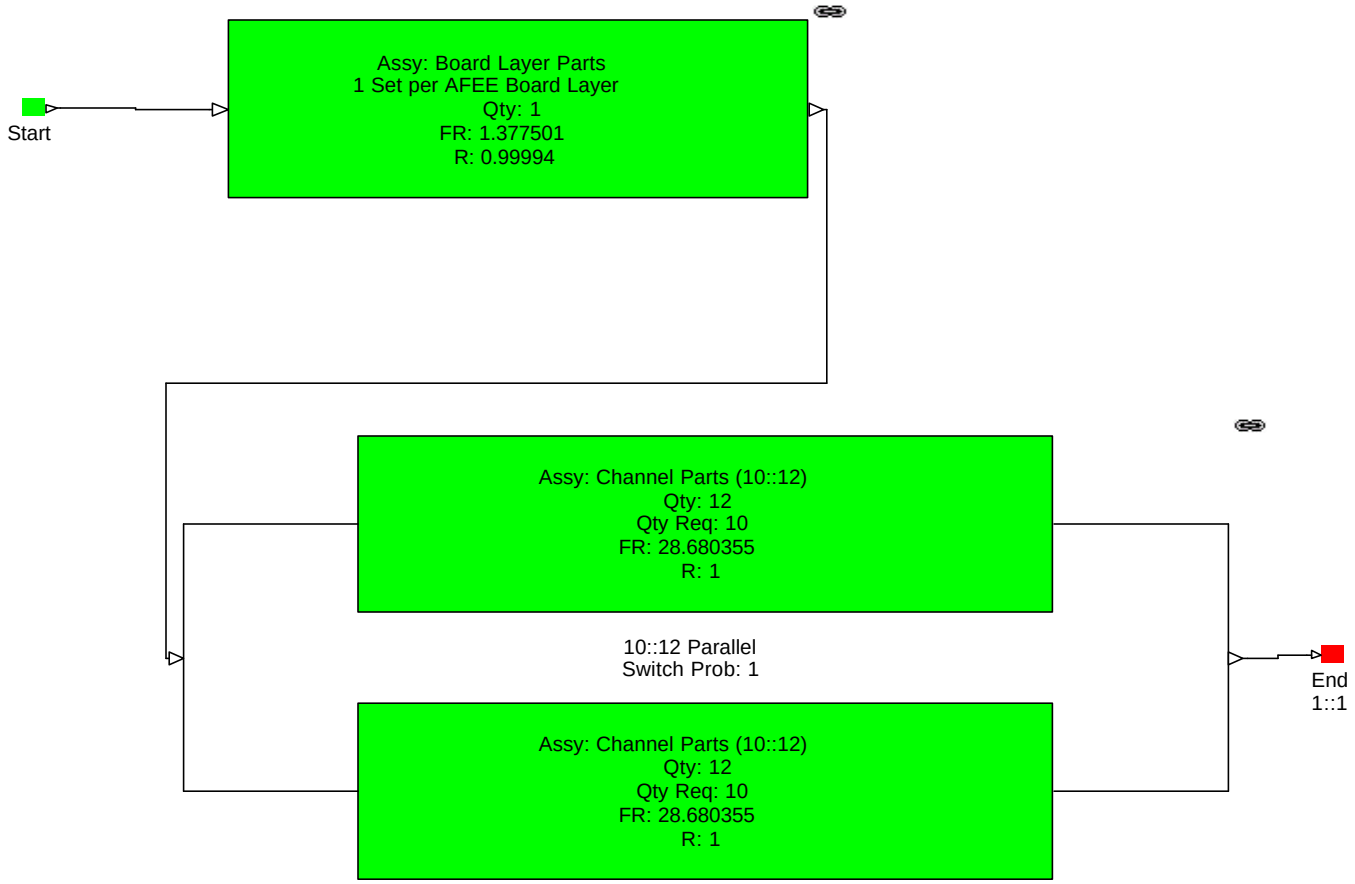

"FR" is Failure Rate of an individual unit.

"R" is Reliability of entire 10::12 Block.

-- RBD Calculation Results --
Calculation Method: Analytical

-- Results at time 43800.00 --
Reliability: 0.999939
Unreliability: 6.07643E-5
Failure Rate: 1.406962

APPENDIX F

GLAST CALORIMETER
FUSING TRADE-OFFS STUDY
AND
FUSE APPLICATION DESIGN INFORMATION

GAMMA-RAY LARGE AREA SPACE TELESCOPE
LARGE AREA TELESCOPE CALORIMETER

A SHORT DISSERTATION ON FUSES AND TRADE-OFFS: AFEE "PER LAYER" FUSING VS AFEE "PER BOARD" FUSING

1. INTRODUCTION

Provision of fuse isolation of replicated hardware elements within the Calorimeter (CAL) subsystem of the Gamma-Ray Large Area Space Telescope (GLAST) Large Area Telescope (LAT) Observatory is under consideration. The intention of this isolation would be to prevent the effects of a power short-circuit failure in one hardware element of the CAL from causing the loss of the entire CAL module.

Consideration has been given to the level within each CAL module that such fusing would be inserted. This Section will provide a discussion of some of the trade-off issues that affect the question of fusing and, if the decision is made to do so, selection of that level of fusing.

Please remember that each CAL module includes four Analog Front End Electronics (AFEE) Boards. Each of these AFEE Boards contains independent circuitry to support four rows of detectors. Each row of detectors and the supporting AFEE circuitry is hereafter referred to as a "layer". There are two power supply voltages (Analog power and Digital power) that will be fused – thus each isolation site will require two fuses. The two levels within each CAL module where fusing has been considered are:

- Fusing for each detector row ("layer") of each Analog Front End Electronics (AFEE) Board. There are 4 layers per AFEE Board and 4 AFEE Boards per CAL Unit.
- Fusing for each AFEE Board. This option requires far fewer fuses but also provides a far lesser level of failure mitigation.

2. SUMMARY

Other than its impact upon selection of fuse size, there is no clear trade-off in favor of fusing for each AFEE Board instead of fusing each detector row ("layer") of each Analog Front End Electronics (AFEE) Board. Fusing by layer provides a far greater level of power short circuit fault isolation at a cost of 32 fuses per CAL Unit, fusing by AFEE Board provides a lesser level of power short circuit fault isolation at a cost of only 8 fuses per CAL Unit.

A much more significant issue is not where to fuse but whether to fuse at all.

Without fusing at some level – at the AFEE Board level is the minimum – there are power filter component single-point failures that can cost an entire CAL Unit. Loss of a CAL Unit results in the loss of the entire LAT Tower. The GLAST mission has defined the loss of one Tower of the 16 as acceptable for the minimum mission. Thus not fusing (or eliminating CAL Unit single-point failures in some manner) leaves the GLAST mission, while not having single-point failures in the CAL Units, with numerous two-point failure modes in the CAL Units.

The decision whether to fuse depends not only upon fuse issues but just as importantly upon the tantalum filter capacitors that are sprinkled so liberally throughout the AFEE Boards and upon the impedance and turn-on characteristics of the CAL Unit power supplies in the TEM. Two of the most significant killers of solid tantalum capacitors (including the type planned for the AFEE Boards) are the circuit impedance and surge currents "seen" by each of these capacitors.

As a matter of principle, it seems that if fusing is to be done, doing the fusing at the lowest level practical is the approach to take unless there are clear reasons not to fuse at the lowest level.

If fusing is to be done, the more important issues to be faced are how to select fuses and fuse face value. FM08A fuses are *extremely unreliable* unless properly derated and properly 100% screened before acceptance for flight use. Without proper derating FM08A fuses, especially the face value ratings of .5 Amp and less, are virtually *guaranteed* to have in-orbit lives of less than a year. Experience has shown that without proper 100% screening, FM08A fuses have infant mortality failures approaching perhaps 10%. Likewise, proper 100% screening has been shown to reliably eliminate infant mortality failures among the population that survives the screen.

Since we are designing to eliminate power short circuits, the likely culprits for power shorts are the tantalum filter capacitors (of which there are many in a CAL Unit). The normal failure mode for tantalum capacitors is a hard low-resistance short circuit. (However, if a sufficiently high current source is available, this hard short circuit may well melt itself open. It is doubtful, though, that the CAL Unit power supplies are that husky – we may and do assume that a shorted tantalum capacitor will remain shorted.) Thus we really do not need to select small fuses. In fact, with respect to fuse reliability and derating requirements, it is far better to use the largest fuse face value that can be interrupted by the available current from the power supply (which may well be affected by the minimum circuit impedance requirements imposed by the solid tantalum capacitors). This, then, is the major driver for upper limit for fuse face value – regardless of what level in the CAL Unit design the fuses are applied.

The lower limit for fuse face value depends upon the fuse useful current rating that results from derating compared the expected current loads at the points in the CAL Unit where fusing is being considered.

3. FUSES AND TRADE-OFFS

3.1 Fuse Failure Rates and Fuse Quantity

Let us immediately acknowledge that fuse failure rates (per the now-obsolete MIL-HDBK-217F or by any other measure) are in all likelihood the highest failure rate items in a CAL module. No really good numbers are available but the space community knows from hard experience that FM08A fuses *unless properly derated, properly handled, and carefully installed* have lifetimes measurable in *months* in orbit. When *properly derated, properly handled, and carefully installed*, these fuses will exhibit useful lifetimes measurable in decades of years – as necessary if fusing is to be considered in practice.

We note that MIL-HDBK-217F, Notice 2, provides for FM08A fuses a failure rate of 9 failures per 10^9 hours for in-orbit conditions. (By comparison, other CAL electronic devices are expected to have failure rates of .003 to .5 failures per 10^9 hours.) That having been said, it is informally recognized by FM08A authorities that this MIL-HDBK-217F value of 9×10^{-9} per hour is utterly incorrect and far too high – if proper design, derating, screening, and fuse handling is employed.

Here are the numbers of fuses required for each fusing concept:

- Fusing for each detector row ("layer") of each Analog Front End Electronics (AFEE) Board.
  - 8 per AFEE Board, resulting in
  - 32 total per CAL module.
- Fusing for each AFEE Board.
  - 2 per AFEE Board, resulting in
  - 8 total per CAL module.

Based upon very inexact estimates of expected device failure rates in the CAL on-orbit application utilizing a fuse failure rate of 9 per 10^9 hours and for a 100% functional CAL module (all piece-parts in one CAL module in a series reliability configuration), here are approximate total failure rates (in failures per 10^9 hours) for the above fusing concepts and for no fuses:

- Fusing for each detector row ("layer") of each Analog Front End Electronics (AFEE) Board.
  - A fuse failure rate of 9×10^{-9} per hour and
  - 32 fuses per CAL module, results in
  - CAL module failure rate = 5837×10^{-9} per hour.
- Fusing for each AFEE Board.
  - A fuse failure rate of 9×10^{-9} per hour and
  - 8 fuses per CAL module, resulting in

    - CAL module failure rate = 5621 x 10^{-9} per hour.
- No fuses.
    - 0 fuses per CAL module, resulting in
    - CAL module failure rate = 5549 x 10^{-9} per hour.

The significance of these failure musings is that the question of where to fuse a CAL module (or even *whether* to fuse a CAL module) cannot be made based solely upon failure rate effects. Including fuses *does* have an impact upon overall failure rate – if one is forced to use the MIL-HDBK-217F estimate of 9 x 10^{-9} per hour as a fuse failure rate.

Any fuses used for flight should be subjected to 100% screening to GSFC recommendations. If screening is performed and the units are suitably derated (details to follow in this dissertation), the actual expected fuse failure rate should be far below 9 x 10^{-9} per hour. Arbitrarily, a value of 1 x 10^{-9} failures per hour will be used for all calculations.

If we redo the above set of bullets for a fuse failure rate of 1 x 10^{-9} failures per hour, we obtain:

- Fusing for each detector row ("layer") of each Analog Front End Electronics (AFEE) Board.
    - A fuse failure rate of 1 x 10^{-9} per hour and
    - 32 fuses per CAL module, results in
    - CAL module failure rate = 5581 x 10^{-9} per hour.
- Fusing for each AFEE Board.
    - A fuse failure rate of 1 x 10^{-9} per hour and
    - 8 fuses per CAL module, resulting in
    - CAL module failure rate = 5557 x 10^{-9} per hour.
- No fuses.
    - 0 fuses per CAL module, resulting in
    - CAL module failure rate = 5549 x 10^{-9} per hour.

3.2 Failure Isolation

Power short failure isolation is attractive for the CAL modules due to the extensive replication of identical otherwise isolated elements in the CAL module design. Refreshing our memory about the electrical structure of a CAL module:

- One CAL module contains four Analog Front End Electronics (AFEE) Boards.
- Each AFEE Board contains four "layers" of detector processing circuits (plus some minor additional components per Board).
- Each AFEE Board "layer" contains 12 processing circuits (plus a digital processing ASIC, a calibration device and other components per "layer").
- The CAL module power supply is *not* redundant.

Depending on the distribution of failed "layers," a CAL module can successfully operate with multiple failed layers. "Multiple" is difficult to define since CAL module performance is a statistical calculation based upon the hodoscopic structure of Cesium Iodide detection "logs"

upon which the CAL is based. It is agreed, though, that a CAL module can return successful science with one dead end of four layers of logs – ie, loss of one complete AFEE Board. In fact, it is believed that useful science will result even with one dead end of all eight layers of logs; ie, loss of two complete AFEE Boards – if *and only if* the two failed AFEE Boards are adjacent (at right angles to each other). What this means is that as long as data from one log end is available, useful science data (though degraded) can be extracted.

Obviously, fusing per layer provides a much higher level of isolation and short circuit failure mitigation.

The following table illustrates failure effects upon a CAL module for various fusing options:

FUSING OPTION	FAILURE MODE	FAILURE EFFECT
No fusing.	Single component failure causes power short on any AFEE Board.	Loss of CAL module.
Each AFEE Board fused; individual Board layers not fused.	omponent power short on any AFEE Board or layer (fuse opens).	Loss of one AFEE Board of the 4 per CAL module.
	A fuse fails open (without power short).	Loss of one AFEE Board of the 4 per CAL module.
	A fuse fails short (without power short).	None
Each individual AFEE Board layer is fused.	Component power short on any AFEE Board or layer (fuse opens).	Loss of one layer of one AFEE Board.
	A fuse fails open (without power short).	Loss of one layer of one AFEE Board.
	A fuse fails short (without power short).	None

3.3 Fuse “Face” Current Rating, Requirements for Derating, and Other Subtleties

The author wishes to express his gratitude to Dr. Henning Leidecker of the GSFC for the time he took and the detailed information he provided to the author concerning FM08A thermal issues, derating, and other subtleties.

FM08A fuses carry a manufacturer-specified current rating for the device, hence the term “face” current rating. This value is specified as 100% of rated value at +25C, rises to 110% at –55C, and drops to 80% at +125C. However manufacturers commonly define “current rating” current-carrying capacity for 4 hours minimum. Obviously, derating is necessary.

A fuse is a “one-shot” thermal device – keep it cool and the element will pass more current without melting open. (That can be seen in the rating temperature effect above.) However, what isn’t specified and perhaps isn’t well-known is that the magnitude of the effect, while nominal for multiple-amp sizes, becomes much more significant for values below an amp – and extremely so for .25 Amp and smaller. The reason has to do with the very fine wire elements in small fuses. The large fuses have both a larger thermal mass and substantial thermal conduction to the end caps through the wire element itself. The small fuses have neither – they depend to a great extent upon thermal conduction through the air internal to the fuse body to the fuse ceramic (normally steatite) barrel and then by conduction via the barrel and leads away from the fuse.

The element material used in the fuse manufacture contributes another issue to the selection of fuse face current rating.

- FM08A devices of 0.75 Amp and above use an Ag-Cu alloy for the element.
  - This alloy is very easy to reliably solder to the fuse end caps.
- FM08A devices of 0.50 Amp and below use nickel for the element.
  - Nickel is very difficult to reliably solder to the fuse end caps.

FM08A fuses have another characteristic that further exacerbates the rating concern with small sizes. These fuses are not hermetically sealed. In an Earth-bound application, this is not a concern but in orbit it is a serious problem. Without that internal air, the fuse (whatever its current rating) loses its thermal conduction through that air. While that is not so important for the larger fuses, as indicted above, it is significant for the FM08A fuses less than about an amp and critical for the .25 Amp and smaller units. Spacecraft have been lost after several months as a result of not considering FM08A fuse hermeticity. In some space applications, people have potted FM08A fuses to make them hermetic. Dr. Leidecker recommends a room-temperature RTV such as GE566 (or equivalent) with an iron oxide loading. If hermetic, some of the additional derating normally required for the small units can be regained.

It is also worth noting that simple mechanical strength favors larger fuse values for reduced failure rates.

The small fuses are very much “fast blow” simply due to their very fine elements. Thus power supply turn-on surges and charging currents to the tantalum capacitors may become significant.

The following table qualitatively illustrates these fuse derating effects. A summary of GSFC-recommended derating numbers is in the next Subsection.

FM08A FUSE RELIABILITY AND DERATING CONCERNS			
CONCERN	FACE RATING $\geq$ 2 A	FACE RATING 0.5 A TO 1.5A	FACE RATING < 0.5A
Mechanical Strength of Element	Not a concern.	Not a concern.	Is a concern.
Definition of “Rated Current” vs. Lifetime	Is a concern.	Is a concern.	Is a concern.
Thermal Mass and Conductivity of Element	Not a concern.	Is a concern.	Is a concern.
Lack of Hermeticity	Not a concern.	Is a concern.	Serious concern.
Power Supply Turn-On Surges and Capacitor Charging Currents	Probably not a concern.	Possible concern (depends upon quantitative analysis).	Serious concern.

To summarize, concerns about fuse size and derating issues strongly favor larger fuses – this favors neither fusing option over the other – if we are concerned only with short-circuit conditions on the two power supplies (AVDD and DVDD) and if the supplies can guarantee enough current to open a larger fuse. The primary source of power short-circuits would be the many power filter tantalum capacitors - the normal failure mode for tantalum capacitors is a hard short. Furthermore if we are concerned only with short-circuit conditions, the matter of layer

fusing versus AFEE Board fusing doesn't enter the question of fuse face current rating – until we look at the current available from the power supply required to interrupt the fuse.

3.4 Fuse Derated Current Capacity

In this Subsection we summarize composite total FM08A face current derating suggestions. These recommendations are extracted from the GSFC PPL-21, Appendix B, for FM08A fuses that are not externally hermetically sealed.

FM08A FUSE DERATING RECOMMENDATIONS FROM GSFC PPL-21, APPENDIX B	
FACE RATING	CARRYING CURRENT REQUIRED DERATING
2 Amps to 15 Amps	50%
1 Amp and 1.5 Amps	45%
0.5 Amp and 0.75 Amp	40%
0.375 Amp	35%
0.25 Amp	30%
0.125 Amp	25%

These deratings provide the maximum recommended carrying current of the fuse as a percentage of the face rating. For example, a 0.25 Amp FM08A should not be operated above 75 ma and a 0.125 Amp FM08A should not be operated above 31 ma.

3.5 Power Supply Current Rating and Limiting

Both the AVDD and DVDD power supplies in the TEM for the CAL Module must be able to deliver enough current to guarantee opening a fuse when that fuse is passing the current supplied to a short circuit.

FM08A fuses with a face rating of 10 Amps or less clearing (including the sizes of interest to the CAL design) are specified to interrupt in 5 seconds maximum when driven at 200% of face rating. Obviously they will also interrupt at lesser over-currents over a long period of time but these conditions are not addressed in the FM08A specifications or in the GSFC PPL.

Guaranteeing satisfactory fuse interruption in the presence of a short circuit favors smaller fuses - the supplies must be heavy enough to support a full CAL Unit load plus a suitable over-current (double?) for the fuse under consideration.

All in all, use the largest fuse that can be reliably interrupted by the available supply current. Since the fault isolation concern is a hard short (the normal failure mode for tantalum capacitors), there is no benefit in using small fuses as long as the power supply can supply enough current to interrupt a larger fuse.

There is a limit here: maximum current from the power supplies may run afoul of the circuit impedance lower limits imposed by the tantalum capacitors.

3.6 Solid Tantalum Capacitors: Power Supply Surges, Circuit Impedance, and Fuse Interruption

As we have suggested, the two big killers of the tantalum filter capacitors (whose potential shorts are the failures that that have prompted these fusing considerations) are the driving circuit impedance and surge currents. The surge currents are a matter of screening the capacitors before use. Driving circuit impedance is a design issue that must be faced. Representative failure rates for these capacitors assume that the surge testing has been done; improperly designed low circuit impedance "seen" by a solid tantalum capacitor will increase the capacitor failure rate by over a factor of ten.

All the literature, the NASA GSFC recommendations, and the military specifications for solid tantalum capacitors agree on these concerns. The GSFC Preferred Parts List (PPL-21) is typical and will be cited here.

It is noted in this PPL that MIL-C-55365 capacitors (CWR's) are *not* recommended for use in power supply filters. This is a matter of both surge currents and drive impedance. Hopefully, by controlling the power supply turn-on this concern can be ameliorated.

This PPL specifically states that surge testing shall be performed on CSR (MIL-C-39003) capacitors and CWR (MIL-C-55365) capacitors (the CWR's are the type of solid tantalum capacitor planned for the AFEE Board power filter application). The test is specified by PPL-21 for capacitors to be used in "Grade 1" applications to be that described in MIL-C-39003/10. Regardless of the GLAST mission category, the failure rate level of the parts planned for CAL use fall into the "Grade 1" applications category.

The PPL along with the relevant military specifications and manufacturers' (including Kemet) literature discuss effective circuit impedance or series resistance – obviously akin to surge currents. The PPL requirements are typical: an effective series resistance of at least 0.1 ohm/volt for "Grade 2" applications or at least 0.3 ohm/volt for "Grade 1" applications with a 1 ohm minimum. (For the 3.3 Volt CAL designs, that 0.3 ohm/volt requirement turns out to be 1 ohm.) In fact, determining the existing impedance as "seen" by any one of the numerous capacitors in parallel isn't simple. The Kemet application note for solid tantalum capacitors discusses the parallel capacitor case (unfortunately the discussion is only qualitative). The effective circuit impedance (available surge current) "seen" by any one capacitor is lowered by the effect of the energy stored in the other capacitors. The current available from stored energy is the issue: energy stored in inductors in series with the capacitor being analyzed also reduces in effective circuit drive impedance. It is a shame that these solid tantalum capacitors must be used for power supply filtering but for this high density surface mount application there doesn't seem to be any choice: the CDR style ceramic chip capacitors max out at 0.47 µF and the only non-solid tantalum capacitors (these are not subject to the circuit impedance limitation) are the CLR series (MIL-C-39006). The CLR devices are leaded and big: about 0.5 inch long by 0.2 inch diameter – obviously not practical.

There may be a trade-off here: power supply current limitations imposed by the minimum circuit impedance requirement will impact the ability to meet the minimum requirement to interrupt a fuse, given a short circuit. This would drive one toward a smaller fuse. It may also come to pass that this compromise between drive impedance for the capacitors and reliable fuse interruption for a reliable size fuse isn't possible.

3.7 Fuse Selection Face Current Rating Selection

We tie together these various strands. If fusing is to be utilized:

- Control power turn-on surge by ramping the power supplies.
- Provide sufficient current limiting to protect the solid tantalum capacitors (but enough to reliably interrupt the selected fuse size).
- Select the largest face current rating fuse that can be reliably interrupted by the available supply current while in the presence of the full load current.
- Derate this fuse face current rating per the recommended derating guidelines for that face current rating.
- The current rating that results from the derating of the face current rating is the largest current that can be passed through the fuse for its normal on-orbit operations. This derated level of current may determine the level in the CAL Unit where the fusing can be applied – it depends on the expected current loads at the points in the CAL Unit where fusing is being considered.