GLAST Calorimeter
Calorimeter - DAQ Interface
Dec 10, 1998

W. Neil Johnson

Naval Research Lab

Calorimeter - DAQ Overview

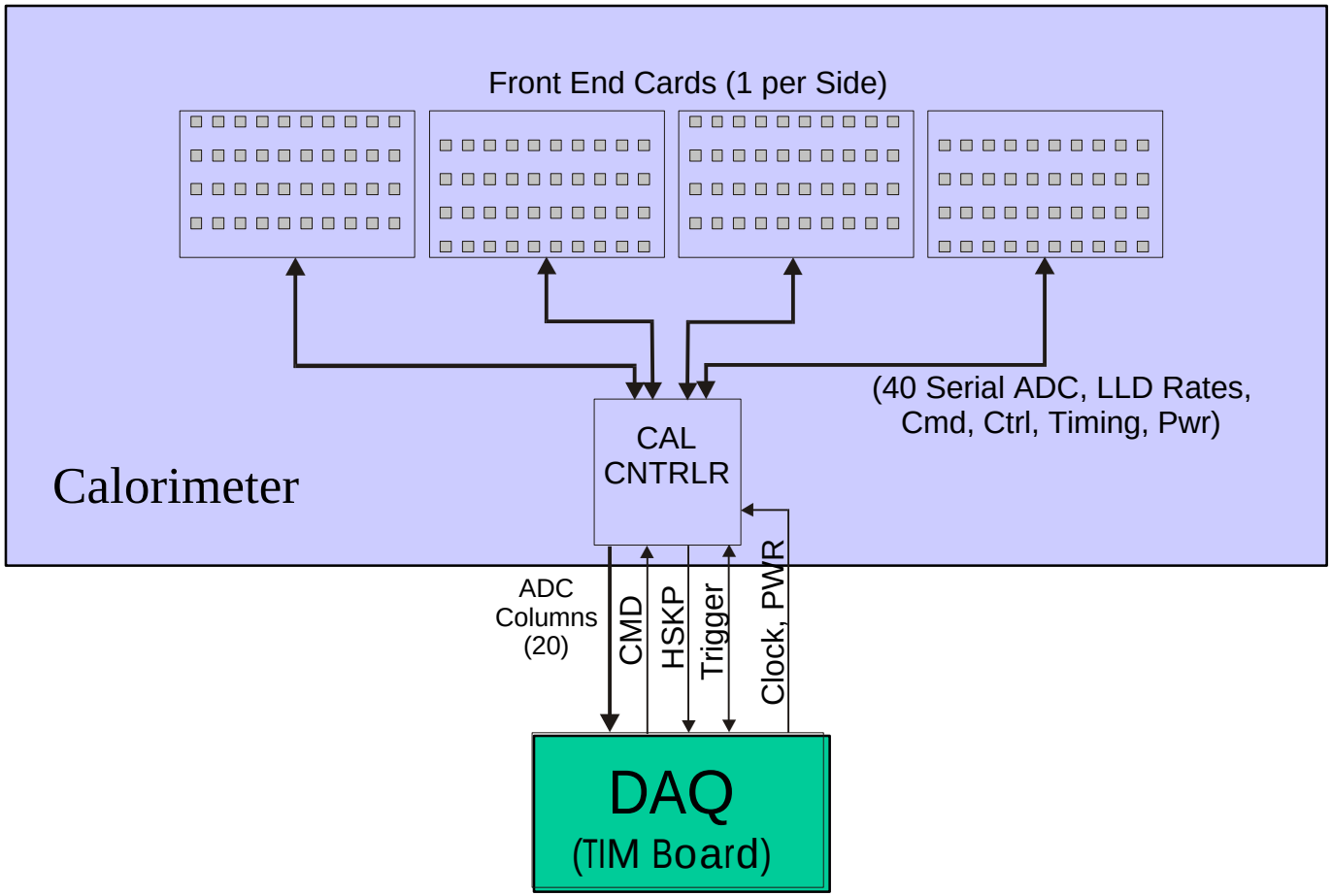

Calorimeter - DAQ Functional Summary

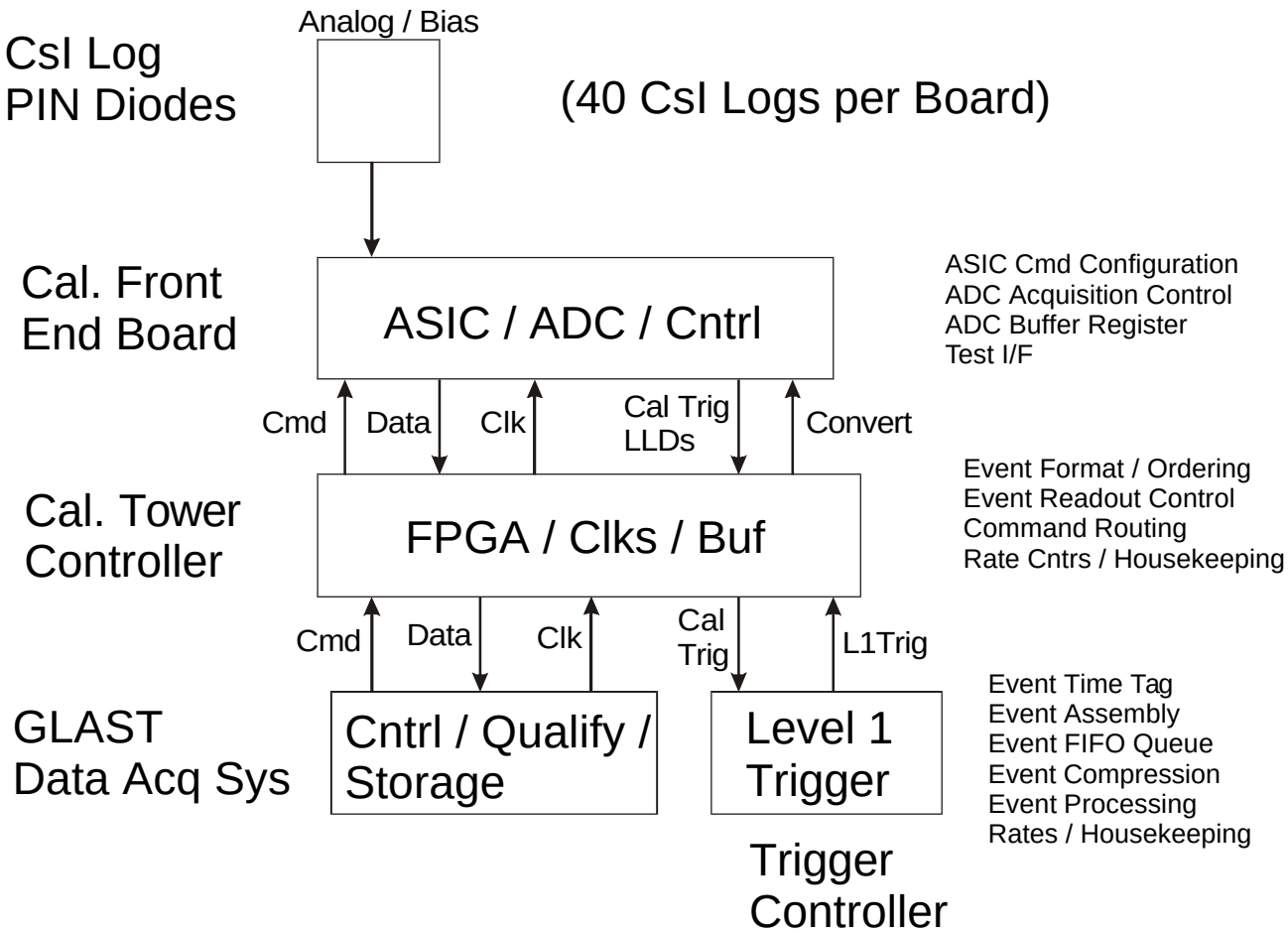

L1 Trigger Data Readout

- 160 ADCs readout simultaneously to cal controller
  - Xfer time ~ 3.5 µsec (3 - 4 MHz)
  - form 20 “columns” of 8 ADC values with flags
- 20 Columns transferred simultaneously to DAQ
  - 128 bit messages at 20 MHz (6.4 µsec)
  - transfer can overlap acquisition of new event
- DAQ I/F merges 20 columns into ordered sequence of 160 16-bit words
  - load into event buffering FIFOs
- DAQ performs event sparsification for readout

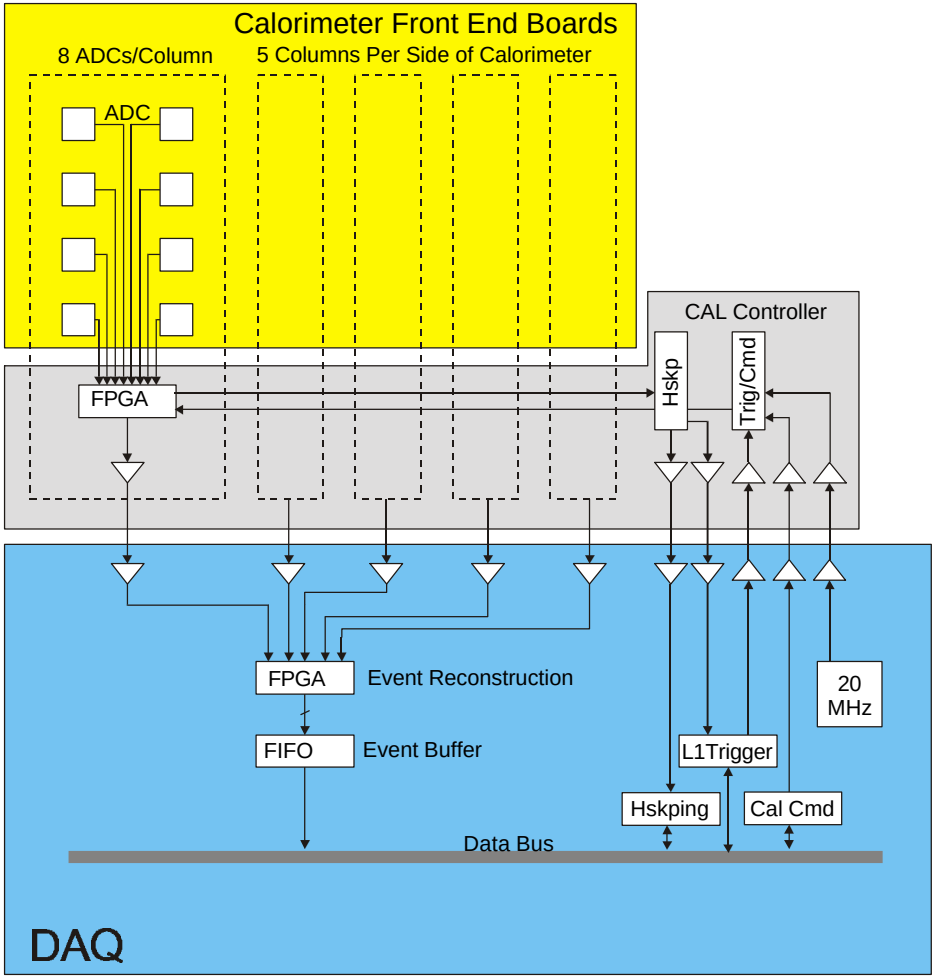

Event Data Volume
(without ordering or compression)

Raw Data to DAQ: 160 x 16 bits = 2.56kb/Tower = 64kb/event

Sparse Readout

	Which Calorim	Which CsI Log			What Energy		
	Tower ID	Cal Layer	CsI Log ID	Log End	PHA Range	PHA Chan	Combined
Range	1 / 25	1 / 8	1 / 10	1 / 2	1 / 4	1 / 4096	$1 / 66\times10^6$
Bits	5	3	4	1	2	12	27

Multiplicity (xtals)	Two Ends of Xtals	Bits/Measurement	Bits/Event	(Simple Ordering)
71 (ave)	$\times$ 2	$\times$ 27	= 3.8k/event	(2.7k/ev)
300 (peak)	$\times$ 2	$\times$ 27	= 16.2k/event	(11.4k/ev)

Calorimeter Housekeeping/Diagnostics

- Singles threshold rate measurements, readout periodically
- Single crystal ADC histograms
- Command status verification
- Voltage and Temperature monitors

Calorimeter Commanding

- Threshold DAC
- Low Range Trigger Threshold DAC
- Hi Range Trigger Threshold DAC
- Bias DAC
- Range Enable
- Trigger Enable
- Test Pulse Amplitude DAC
- Test Pulse Injection
- Test Gain
- Diagnostic Modes
- Diagnostic Histogram selection/control

Command Addressing

	Tower ID	Subsys ID	Cal Side	Cal Column	Cal Row	Cmd Function	Cmd Data	Total
Range	1 / 25	1/8	1 / 4	1 / 10	1 / 4	1 / 32	1 / 256	
Bits	5	3	2	4	2	5	8	26
	Block Func - 8 bits		Subsystem Specific - 24 bits					

Command blocks addressed to specific tower and subsystem (eg. CAL, ADC, TKR, DAQ, etc). Block specifics, with exception of header, are unique to subsystem.